MV-CA013-A0UM/UC

1.3MP1/2"CMOSUSB3.0AreaScanCamera

Introduction

MV-CA013-A0UM/UC camera provides high-quality images. It uses USB3.0 interface to transmit images in real time, and its max. frame rate can reach 201 fps in full resolution.

Key Feature

- Supportsautoor manual adjustment of gain, exposuretime,and manual adjustment of LUT, Gammacorrection, etc. Supportscustomized ROI,
- horizontal and vertical reverseimageoutput. Adoptscompactdesign for flexible installation.
- CompatiblewithUSB3 Vision Protocol, GenICam
- Standard,andthird-party software based on the protocolandstandard.

Available Model

- Mono camera: MV-CA013-A0UM
- Color camera: MV-CA013-A0UC

Applicable Industry

Electronic semiconductor factory automation, liquor and beverage, medicine packing,etc.

Sensor Quantum Efficiency

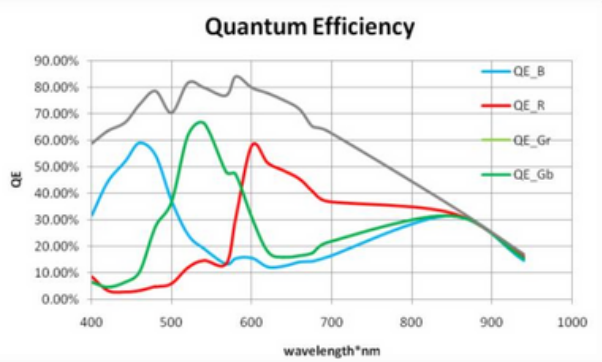

Dimension

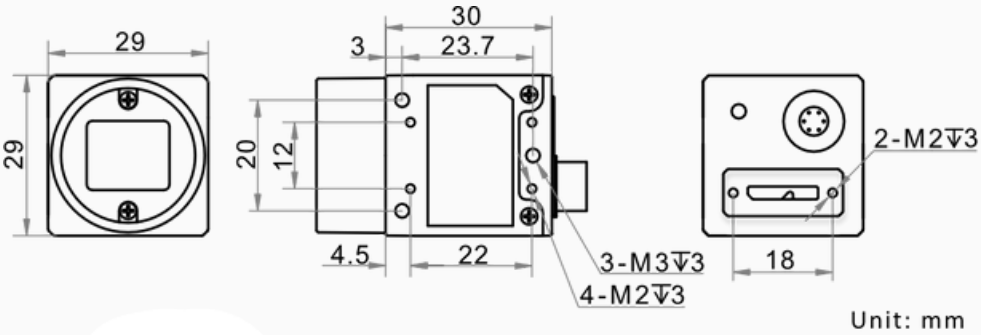

Specification

Model *Camera*	MV-CA013-A0UM	MV-CA013-A0UC
Sensor type		
Pixel size	CMOS, global shutter 4.8 μm × 4.8 μm	
Sensor size	1/2" 1280 × 1024 201 fps @1280 ×	
Resolution Max.	1024 53 dB 40 dB 0 dB to 16 dB 9 μs	
frame rate	to 10 sec Off/Once/Continuous	
Dynamic range	exposure mode Mono	
SNR Gain		
Exposure time		
Exposure mode		
Mono/color		
Pixel format		
		Color
	Mono 8/10/10Packed/12/12Packed	Mono 8/10/12, Bayer GB 8/10/10Packed /12/1210Packed, YUV422Packed, YUV422_YUYV_Packed, RGB 8, BGR 8
Binning	Supports 1 × 1, 2 × 2, 4 × 4	
Decimation	Supports 1 × 1, 2 × 2, 4 × 4	
Reverse image	Supports horizontal and vertical reverse image output	
Electrical features		
Data interface	USB3.0, compatible with USB2.0	
Digital I/O	6-pin P7 connector provides power and I/O, including opto-isolated input × 1 (Line 0), opto-isolated output × 1(Line 1), and bi-directional non-isolated I/O × 1 (Line 2)	
Power supply	9 VDC to 24 VDC, supports USB3.0 power supply	
Power consumption	Typ. 2.4 W@5 VDC (USB3.0 provides power supply)	Typ. 2.7 W@5 VDC (USB3.0 provides power supply)
Mechanical		
Lens mount	C-mount	
Dimension	29 mm × 29 mm × 30 mm (1.1" × 1.1" × 1.2")	
Weight	Approx. 80 g (0.18 lb.)	
Ingress protection	IP30 (under proper lens installation and wiring)	
Temperature	Working temperature: 0 °C to 50 °C (32 °F to 122 °F) Storage temperature: -30 °C to 70 °C (-22 °F to 158 °F)	
Humidity	20% to 95% RH, non-condensing	
General		
Client software	MVS or third-party software meeting with USB3 Vision Protocol	
Operating system	32/64-bit Windows XP/7/10, 32/64-bit Linux and 64-bit MacOS	
Compatibility	USB3 Vision, GenICam	
Certification	CE, RoHS, KC	

HIKROBOT
Hangzhou Hikrobot Co., Ltd.
en.hikrobotics.com

VISCON
VISCON TECHNOLOGY CO., LTD.
54/88 KHLONGSEE, KHLONG LUANG DISTRICT, PATHUM THANI 12120 THAILAND
TEL : 02-0009297
MB : 0809293068
E-MAIL : SALE@VISCONTECHNOLOGY.COM

© Hangzhou Hikrobot Co., Ltd. All Rights Reserved.
Hangzhou Hikrobot does not tolerate any infringement. Any organization or individual may not imitate or reproduce in whole or in part of the content. The data herein is based on Hikrobot's internal evaluation. Actual data may vary depending on specific configuration and operating condition. The information herein is subject to change without notice All the content has been checked conscientiously. Nevertheless, Hikrobot shall not be liable to damages resulting from errors, inconsistencies or omissions.