MV-CB013-A0UM/UC

1.3MP1/2"CMOSUSB3.0BoardLevelCamera

Introduction

MV-CB013-A0UM/UC camera adopts CMOS sensor to provide high-quality images. It uses USB3.0 interface to transmit non-compressed images in real time, and its max. frame rate can reach 201 fps in full resolution. With single board design, it is small in size, which can meet different spatial requirements.

Key Feature

- Compact design for flexible installation.
- Supports auto or manual adjustment of gain, exposure time, white balance, Gamma correction, LUT, etc. Adopts image interpolation algorithm for color cameras to have better color correction. Adopts USB3.0 interface to provide power supply and transmit data. Compatible with USB3 Vision Protocol, GenICam standard, and third-party software based on these protocol and standard.

Available Model

- Singleboard mono camera: MV-CB013-A0UM-B
- C-mount mono camera: MV-CB013-A0UM-C
- C-mount color camera: MV-CB013-A0UC-C
- M12-mount mono camera: MV-CB013-A0UM-S
- M12-mount color camera: MV-CB013-A0UC-S

Applicable Industry

Electronic semiconductor,factory automation, logistics, bottledetection,medicine packing, etc.

Sensor Quantum Efficiency

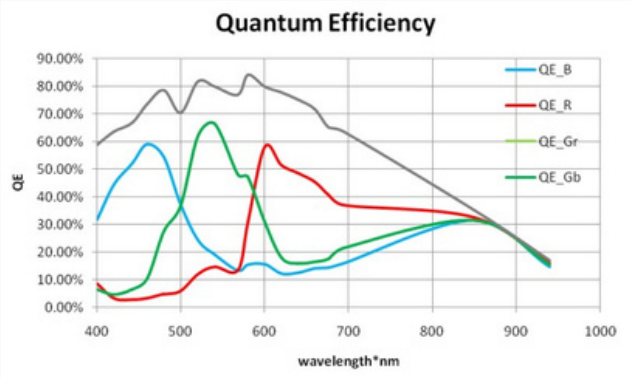

Specification

Model	MV-CB013-A0UM	MV-CB013-A0UC
Camera		
Sensor type	CMOS, global shutter 4.8 μm × 4.8 μm	
Pixel size	1/2" 1280 × 1024 201 fps @1280 ×	
Sensor size	1024 53 dB 40 dB 0 dB to 16 dB 9 μs to	
Resolution	10 sec Off/ Once/ Continuous exposure	
Max. frame rate	mode Mono	
Dynamic range		
SNR		
Gain		
Exposure time		
Exposure mode		
Mono/color		Color
Pixel format	Mono 8/10/10p/12/12p	Mono 8/10/12, Bayer GB 8/10/10p/12/12p YUV422Packed, YUV422_YUYV_Packed, RGB 8, BGR 8
Binning	Supports 1 × 1, 2 × 2, 4 × 4	
Decimation	Supports 1 × 1, 2 × 2, 4 × 4 Supports horizontal and	
Reverse image	vertical reverse image output	
Electrical features		
Data interface	USB3.0	
Digital I/O	Bi-directional non-isolated I/O × 2 (Line 2, Line 5)	
Power supply	USB3.0 power supply	
Power consumption	Typ. 1.6 W@5 VDC (USB3.0 provides power supply)	Typ. 2.8 W@5 VDC (USB3.0 provides power supply)
Mechanical		
Lens mount	Single board camera: None C-mount camera: C-mount M12-mount camera: M12-mount	C-mount camera: C-mount M12-mount camera: M12-mount
Dimension	Single board camera: 32.5 mm × 32.5 mm × 1.6 mm (1.3" × 1.3" × 0.1") C-mount camera: 35 mm × 35 mm × 8.6 mm (1.4" × 1.4" × 0.3") M12-mount camera: 35 mm × 35 mm × 8.6 mm (1.4" × 1.4" × 0.3")	C-mount camera: 35 mm × 35 mm × 8.6 mm (1.4" × 1.4" × 0.3") M12-mount camera: 35 mm × 35 mm × 8.6 mm (1.4" × 1.4" × 0.3")
Weight	Single board camera: Approx. 10 g (0.02 lb.) C-mount camera: Approx. 30 g (0.07 lb.) M12-mount camera: Approx. 30 g (0.07 lb.)	C-mount camera: Approx. 30 g (0.07 lb.) M12-mount camera: Approx. 30 g (0.07 lb.)
Temperature	Working temperature: 0 °C to 50 °C (32 °F to 122 °F) Storage temperature: -30 °C to 70 °C (-22 °F to 158 °F)	
Humidity	20% to 80% RH, non-condensing	
General		
Client software	MVS or third-party software compatible with USB3 Vision Protocol	
Operating system	32/64-bit Windows XP/7/10, 32/64-bit Linux, and 64-bit MacOS	
Compatibility	USB3 Vision, GenICam	
Certification	CE, FCC, RoHS, KC	

Dimension

Single board camera:

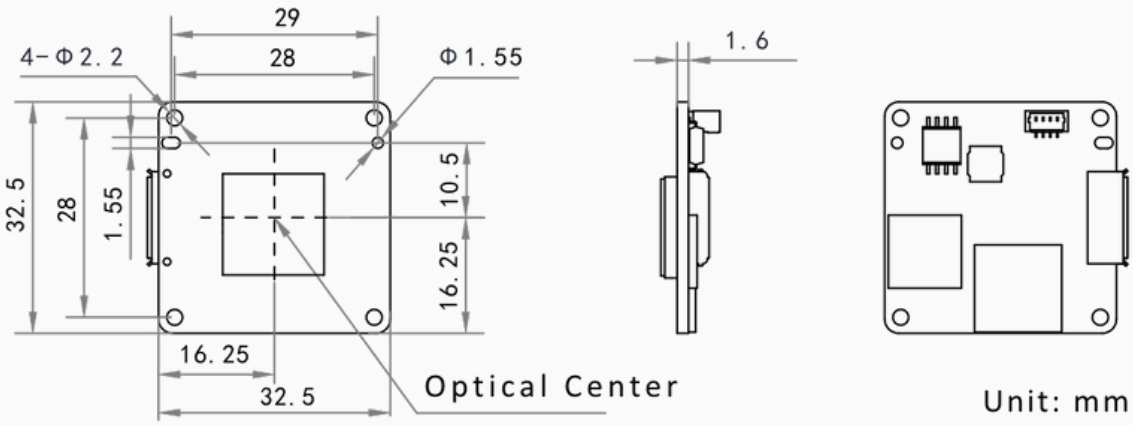

C-mount camera:

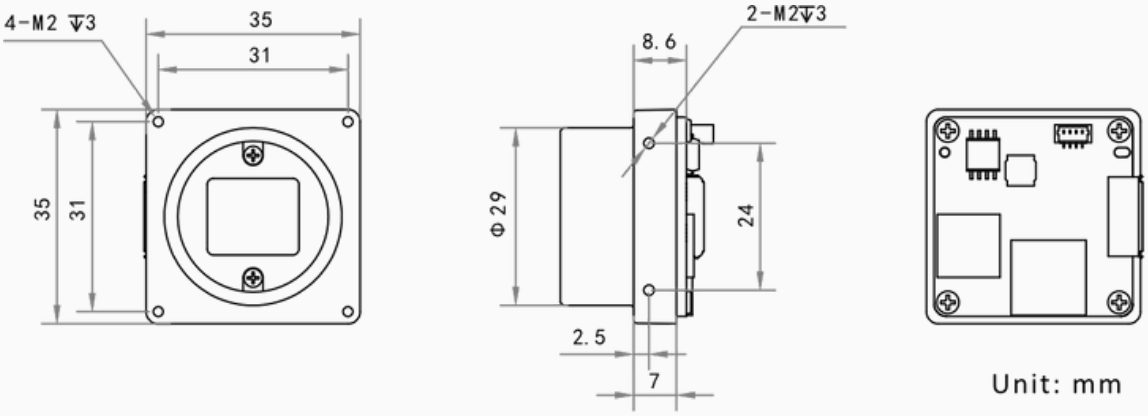

M12-mount camera:

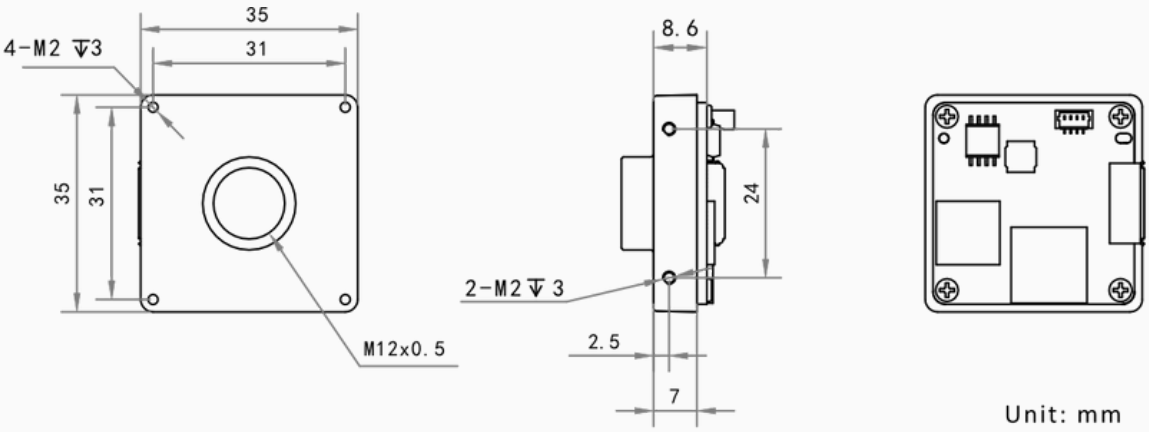

HIKROBOT
Hangzhou Hikrobot Co., Ltd.
en.hikrobotics.com

VISCON
VISCON TECHNOLOGY CO., LTD.
54/88 KHLONGSEE, KHLONG LUANG DISTRICT, PATHUM THANI 12120 THAILAND
TEL : 02-0009297
MB : 0809293068
E-MAIL : SALE@VISCONTECHNOLOGY.COM

© Hangzhou Hikrobot Co., Ltd. All Rights Reserved.
Hangzhou Hikrobot does not tolerate any infringement. Any organization or individual may not imitate or reproduce in whole or in part of the content. The data herein is based on Hikrobot's internal evaluation. Actual data may vary depending on specific configuration and operating condition. The information herein is subject to change without notice All the content has been checked conscientiously. Nevertheless, Hikrobot shall not be liable to damages resulting from errors, inconsistencies or omissions.