MV-CB016-10UM/UC

1.6MP1/2.9"CMOSUSB3.0BoardLevel Camera

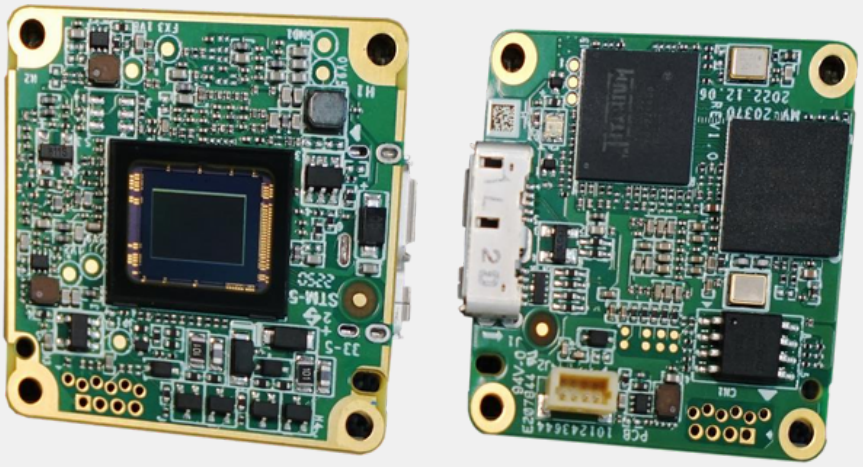

Introduction

MV-CB016-10UM/UC camera adopts Sony® IMX273 sensor to provide high-quality image. With single board design, it is small in size,whichcanmeet different spatial requirements.

Key Feature

- Supports auto and manual adjustment for gain, exposure control, white balance, LUT, etc.
- Adopts image interpolation algorithm for color camera to have better color correction.
- Power supply and data transmission via USB3.0 interface.
- Compatible with USB3 Vision Protocol, GenlCam standard, and the third-party software based on these protocol and standard.

Available Model

Single board mono camera: MV-CB016-10UM-B
Single board color camera: MV-CB016-10UC-B
C-mount mono camera: MV-CB016-10UM-C
C-mount color camera: MV-CB016-10UC-C
M12-mount mono camera: MV-CB016-10UM-S
M12-mount color camera: MV-CB016-10UC-S

Applicable Industry

Electronic semiconductor,factory automation, logistics, liquor and beverage, medicinepacking, etc.

Sensor Quantum Efficiency

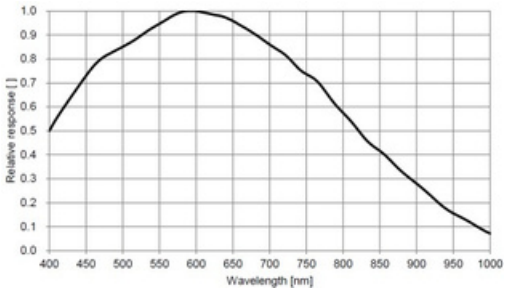

MV-CB016-10UM

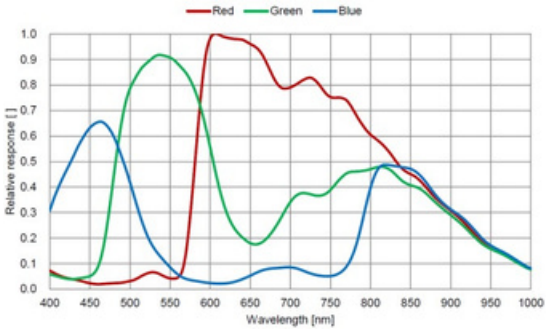

MV-CB016-10UC

Model	MV-CB016-10UM	MV-CB016-10UC
Performance		
Sensor type	CMOS, global shutter	
Sensor model	Sony® IMX273	
Pixel size	3.45 μm × 3.45 μm	
Sensor size	1/2.9"	
Resolution	1440 × 1080	
Max. frame rate	165.4 fps @ 1440 × 1080 Mono 8 (ADC 12) 249.1 fps @ 1440 × 1080 Mono 8 (ADC 8)	165.4 fps @ 1440 × 1080 Bayer RG 8 (ADC 12) 249.1 fps @ 1440 × 1080 Bayer RG 8 (ADC 8)
Dynamic range	71.5 dB	
SNR	39.9 dB	
Gain	0 dB to 17 dB	
Exposure time	UltraShort exposure mode: 1 μs to 14 μs Standard exposure mode: 15 μs to 10 sec	
Exposure mode	Off/ Once/ Continuous exposure mode	
Mono/color	Mono	Color
Pixel format	Mono 8/10/10Packed/12/12Packed	Mono 8/10/12 Bayer RG 8/10/10Packed/12/12Packed, YUV422Packed, YUV422_YUYV_Packed, RGB 8, BGR 8
Binning	Supports 1 × 1, 2 × 2	
Decimation	Supports 1 × 1, 2 × 2	
Reverse image	Supports horizontal and vertical reverse image output	
Electrical feature		
Data interface	USB 3.0	
Digital I/O	Bi-directional non-isolated I/O × 2 (Line 2, Line 5)	
Power supply	USB 3.0 power supply	
Power consumption	Typ. 1.5 W @ 5 VDC	Typ. 1.9 W @ 5 VDC
Mechanical		
Lens mount	Single board camera: None C-mount camera: C-mount M12-mount camera: M12-mount	
Dimension (without lens)	Single board camera: 32.5 mm × 32.5 mm × 1.6 mm (1.3" × 1.3" × 0.1") C-mount camera: 35 mm × 35 mm × 8.6 mm (1.4" × 1.4" × 0.3") M12-mount camera: 35 mm × 35 mm × 8.6 mm (1.4" × 1.4" × 0.3")	
Weight	Single board camera: Approx. 10 g (0.02 lb.) C-mount camera: Approx. 30 g (0.07 lb.) M12-mount camera: Approx. 43.5 g (0.1 lb.)	
Temperature	Working temperature: 0 °C to 50 °C (32 °F to 122 °F) Storage temperature: −30 °C to 70 °C (−22 °F to 158 °F)	
Humidity	20% RH to 80% RH (no condensation)	
General		
Client software	MVS or third-party software with USB3 Vision Protocol	
Operating system	32/64-bit Windows 7/10, 64-bit Windows 11, and 32/64-bit Linux	
Compatibility	USB3 Vision, GenICam	
Certification	CE, RoHS, KC	

Dimension

Singleboardcamera:

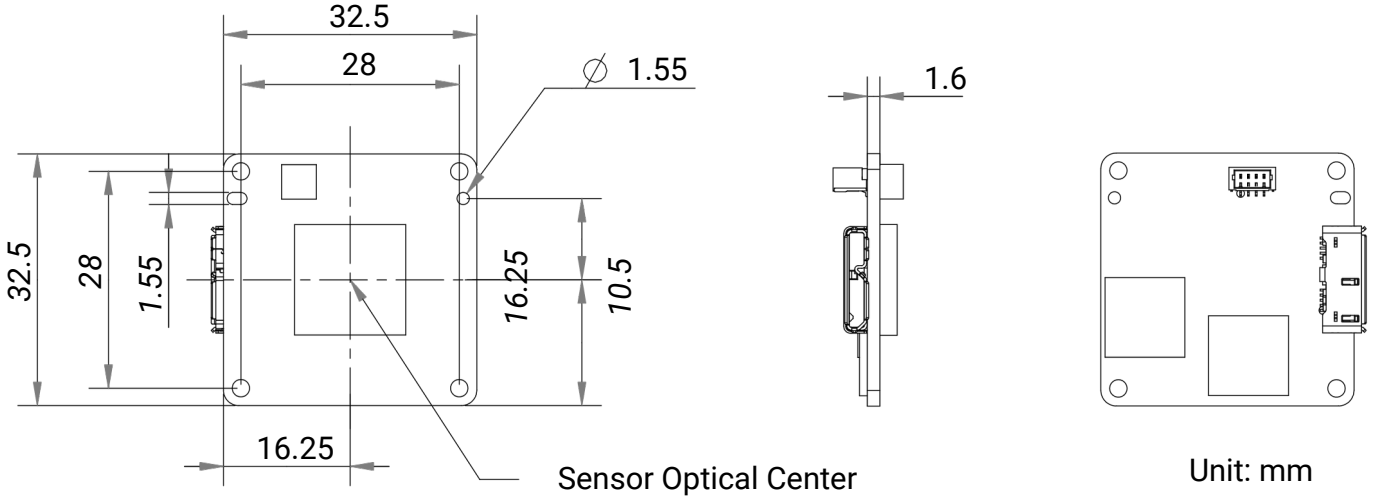

C-mount camera:

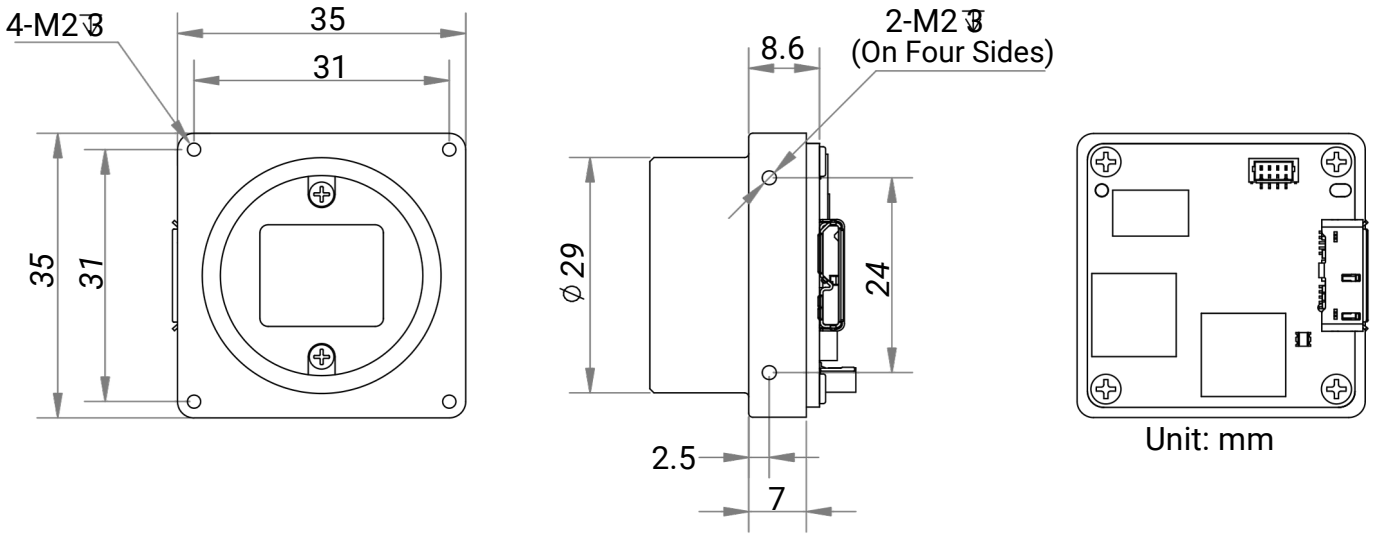

M12-mount camera:

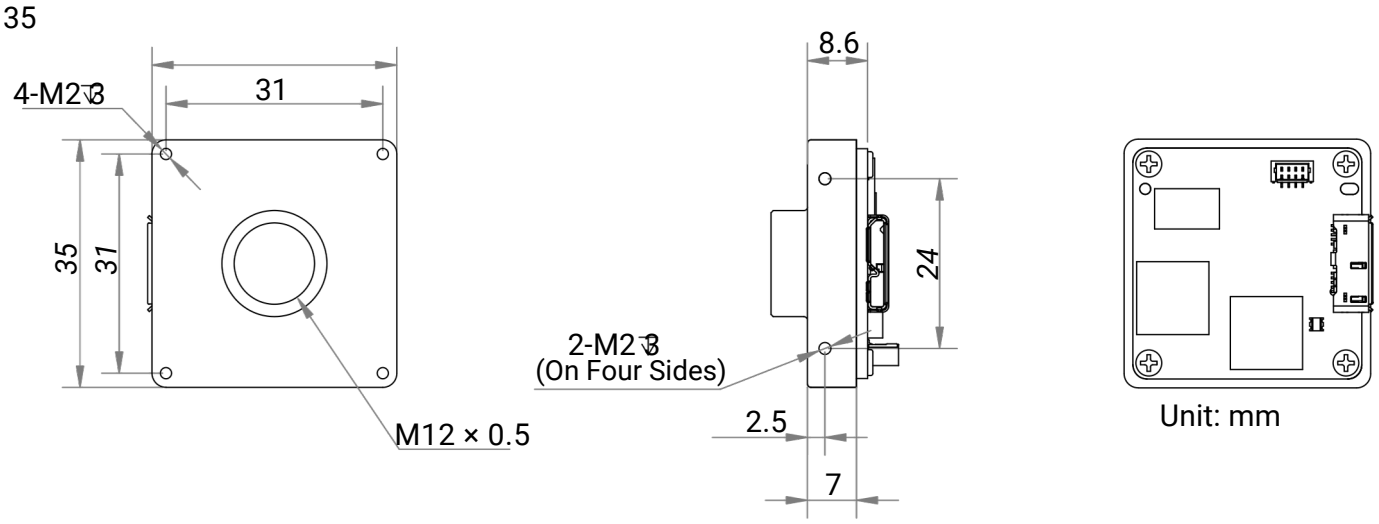

Hangzhou Hikrobot Co. Ltd.
en.hikrobotics.com

VISCON

VISCON TECHNOLOGY CO., LTD.
54/88 KHLONGSEE, KHLONG LUANG DISTRICT, PATHUM THANI 12120 THAILAND
TEL : 02-0009297
MB : 0809293068
E-MAIL : SALE@VISCONTECHNOLOGY.COM

© Hangzhou Hikrobot Co., Ltd. All Rights Reserved.
Hangzhou Hikrobot does not tolerate any infringement. Any organization or individual may not imitate or reproduce in whole or in part of the content. The data herein is based on Hikrobot's internal evaluation. Actual data may vary depending on specific configuration and operating condition. The information herein is subject to change without notice All the content has been checked conscientiously. Nevertheless, Hikrobot shall not be liable to damages resulting from errors, inconsistencies or omissions.