MV-CB060-10UM/UC

6MP1/1.8"CMOSUSB3.0BoardLevelCamera

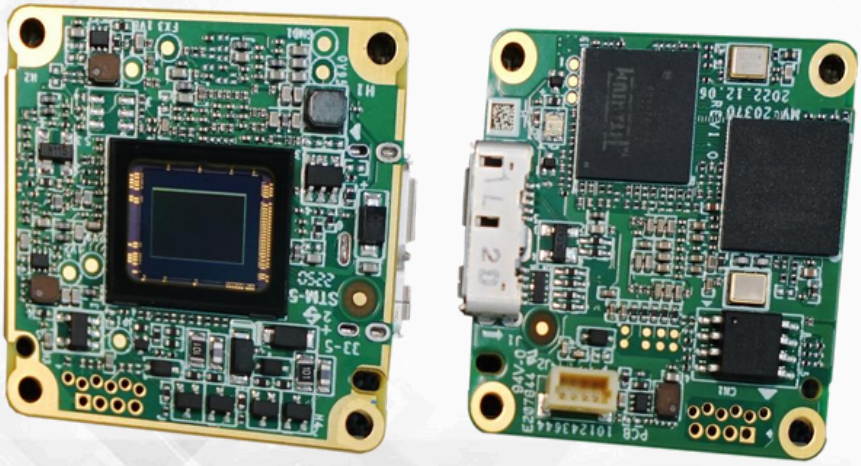

Introduction

MV-CB060-10UM/UC adopts Sony® IMX178 sensor to provide high-quality images. It uses USB3.0 interface to transmit images in real time, and its max. frame rate reaches 60.9 fps in full resolution.

Itis small in size and can meet different spatial requirements.

Key Feature

- Compact design for flexible installation. Supports auto or manual adjustment of gain, exposure time, and white balance, and manual adjustment of Gamma correction, LUT, etc. Supports HDR function with different exposure time and gain. Supports hardware trigger, software trigger, free run, etc. Compatible with USB3 Vision Protocol, GenICam standard, and the third-party software based on these protocol and standard.

Available Model

Single board mono camera: MV-CB060-10UM-B
Single board color camera: MV-CB060-10UC-B C-mount mono camera: MV-CB060-10UM-C C-mount color camera: MV-CB060-10UC-C M12-mount mono camera: MV-CB060-10UM-S M12-mount color camera: MV-CB060-10UC-S

Applicable Industry

Electronic semiconductor, factory automation, logistics, liquor and beverage, medicinepacking, etc.

Sensor Quantum Efficiency

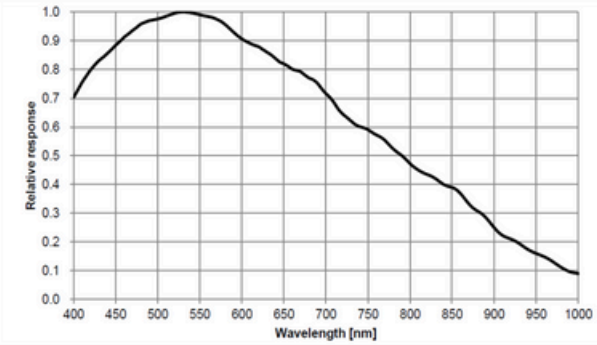

MV-CB060-10UM

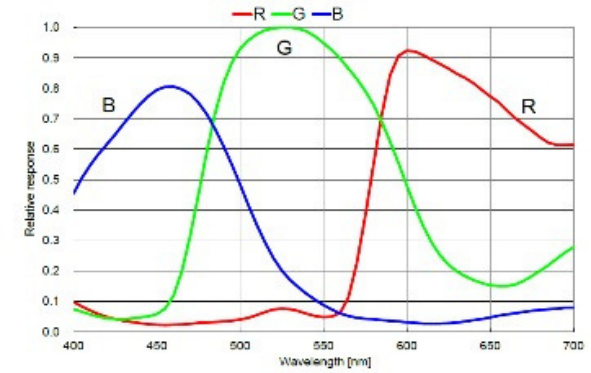

MV-CB060-10UC

Specification

Model	MV-CB060-10UM	MV-CB060-10UC
Performance		
Sensor type	CMOS, rolling shutter	
Sensor model	Sony® IMX178	
Pixel size	2.4 μm × 2.4 μm	
Sensor size	1/1.8"	
Resolution	3072 × 2048	
Max. frame rate	60.9 fps @3072 × 2048 Mono 8	60.9 fps @3072 × 2048 Bayer RG 8
Dynamic range	66 dB	
SNR	41.5 dB	
Gain	0 dB to 24 dB	
Exposure time	8 μs to 1 sec	
Exposure mode	Off/ Once/ Continuous exposure mode, supports Global Reset and Trigger Rolling	
Mono/color	Mono	Color
Pixel format	Mono 8/10/10Packed/12/12Packed	Mono 8/10/12, Bayer RG 8/10/10Packed/12/12Packed, YUV422Packed, YUV422_YUYV_Packed, RGB 8, BGR 8
Binning	Supports 1 × 1, 2 × 2	
Decimation	Supports 1 × 1, 2 × 2, 4 × 4	
Reverse image	Supports horizontal and vertical reverse image output	
Electrical feature		
Data interface	USB3.0	
Digital I/O	Bi-directional non-isolated I/O × 2 (Line 2, Line 5)	
Power supply	USB3.0 power supply	
Power consumption	Typ. 1.5 W@5 VDC	Typ. 1.8 W@5 VDC
Mechanical		
Lens mount	Single board camera: None C-mount camera: C-mount M12-mount camera: M12-mount	
Dimension	Single board camera: 32.5 mm × 32.5 mm × 1.6 mm (1.3" × 1.3" × 0.1") C-mount camera: 35 mm × 35 mm × 8.6 mm (1.4" × 1.4" × 0.3") M12-mount camera: 35 mm × 35 mm × 8.6 mm (1.4" × 1.4" × 0.3")	
Weight	Single board camera: Approx. 10 g (0.02 lb.) C-mount camera: Approx. 30 g (0.07 lb.) M12-mount camera: Approx. 43.5 g (0.1 lb.)	
Temperature	Working temperature: 0 °C to 50 °C (32 °F to 122 °F) Storage temperature: -30 °C to 70 °C (-22 °F to 158 °F)	
Humidity	20% to 80% RH, non-condensing	
General		
Client software	MVS or third-party software with USB3 Vision Protocol	
Operating system	32/64-bit Windows XP/7/10, 32/64-bit Linux and 64-bit MacOS	
Compatibility	USB3 Vision, GenICam	
Certification	CE, RoHS, KC	

Dimension

Single board camera:

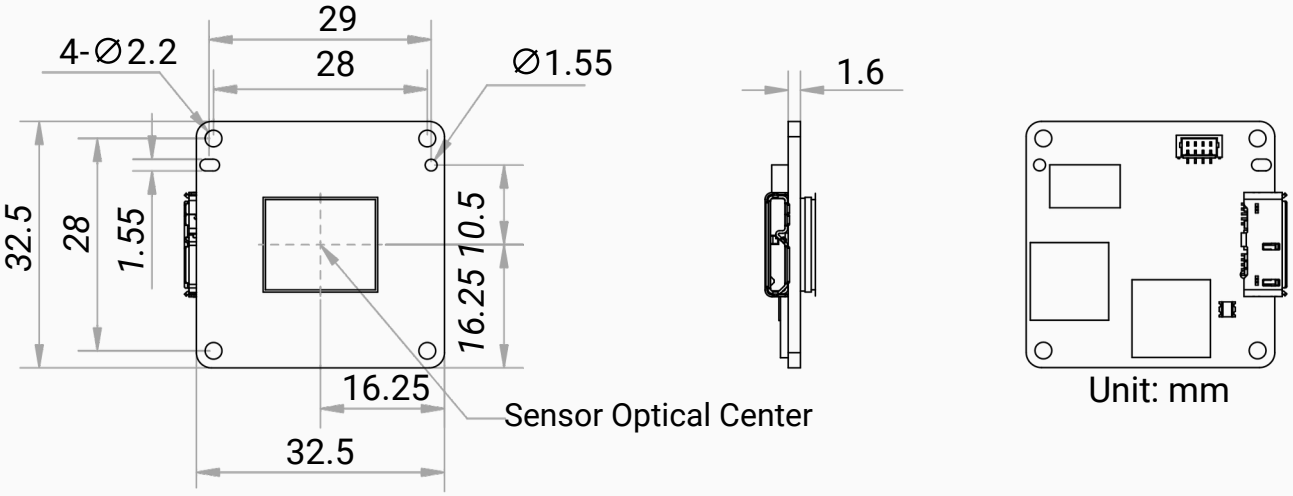

C-mount camera:

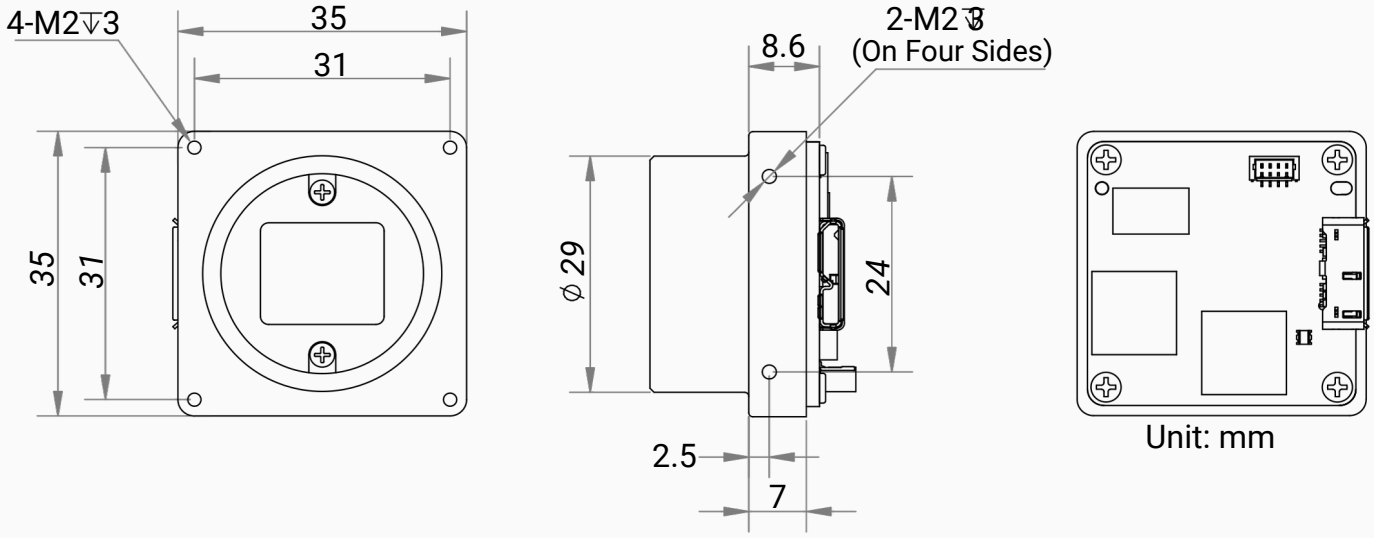

M12-mount camera:

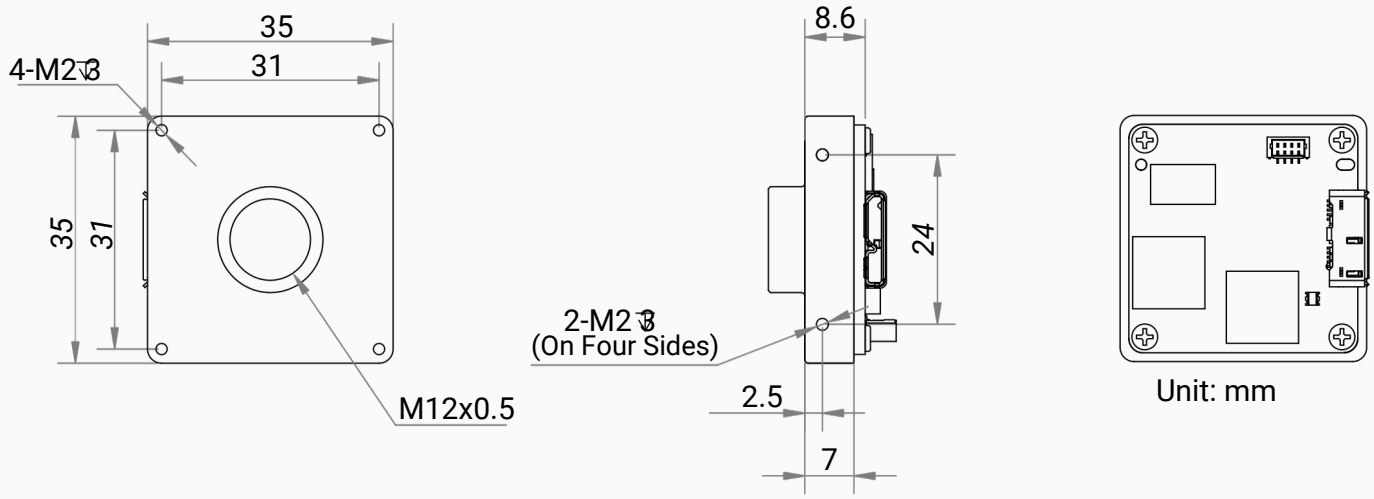

HIKROBOT
Hangzhou Hikrobot Co., Ltd.
en.hikrobotics.com

VISCON
VISCON TECHNOLOGY CO., LTD.
54/88 KHLONGSEE, KHLONG LUANG DISTRICT, PATHUM THANI 12120 THAILAND
TEL : 02-0009297
MB : 0809293068
E-MAIL : SALE@VISCONTECHNOLOGY.COM

© Hangzhou Hikrobot Co., Ltd. All Rights Reserved.
Hangzhou Hikrobot does not tolerate any infringement. Any organization or individual may not imitate or reproduce in whole or in part of the content. The data herein is based on Hikrobot's internal evaluation. Actual data may vary depending on specific configuration and operating condition. The information herein is subject to change without notice All the content has been checked conscientiously. Nevertheless, Hikrobot shall not be liable to damages resulting from errors, inconsistencies or omissions.