# MV-CB120-10UM/UC V4

**12MP1/1.7"CMOSUSB3.0BoardLevelCamera**

## Introduction

MV-CB120-10UM/UC V4 camera adopts Sony® IMX226 sensor to provide high-quality image and transmit images in real time, and max. frame rate can reach 30 fps. With single board design, it is small in size, whichcan meet different spatial requirements.

## Key Feature

- Supports auto and manual adjustment for gain, exposure control, white balance, Gamma, LUT, etc. Adopts image interpolation
- algorithm for color camera to have better color correction. Power supply and data
- transmission via USB3.0 interface. Compatible with USB3 Vision Protocol,
- GenlCam standard, and the third-party software based on these protocol and standard.

## Available Model

Single board mono camera: MV-CB120-10UM-B V4
Single board color camera: MV-CB120-10UC-B V4
C-mount mono camera: MV-CB120-10UM-C V4
C-mount color camera: MV-CB120-10UC-C V4
M12-mount mono camera: MV-CB120-10UM-S V4
M12-mount color camera: MV-CB120-10UC-S V4

## Sensor Quantum Efficiency

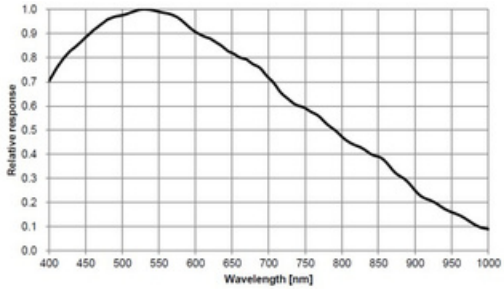


MV-CB120-10UM V4

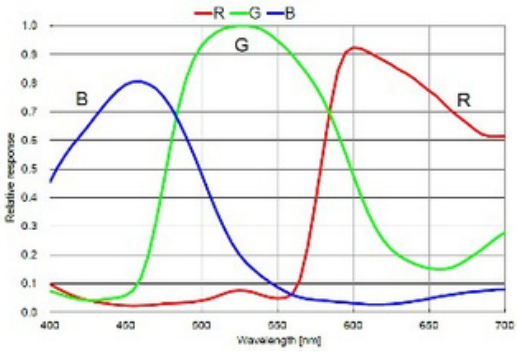


MV-CB120-10UC V4

## Applicable Industry

Electronic semiconductor,factory automation, logistics, liquor and beverage, medicine packing, etc.

# Specification

| Model *Camera* | MV-CB120-10UM V4 | MV-CB120-10UC V4 |
|---|---|---|
| **Sensor type** | | |
| **Sensor model** | CMOS, rolling shutter | |
| **Pixel size** | Sony® IMX226 | |
| **Sensor size** | 1.85 μm × 1.85 μm | |
| **Resolution Max.** | 1/1.7" | |
| **frame rate** | 4032 × 3036 | |
| **Dynamic range** | 30 fps @ 4032 × 3036 Mono 8 | 30 fps @ 4032 × 3036 Bayer RG 8 |
| **SNR Gain** | 64.6 dB | |
| **Exposure time** | 39.9 dB | |
| **Exposure mode** | 0 dB to 20 dB | |
| **Mono/color** | 33 μs to 2 sec | |
| | Supports Off/Once/Continuous exposure mode, and Global Reset. | |
| | Mono | Color |
| **Pixel format** | Mono 8/10/10Packed/12/12Packed | Mono8/10/12<br>Bayer RG 8/10/10Packed/12/12Packed<br>YUV422Packed, YUV422_YUYV_Packed<br>RGB8, BGR8 |
| **Binning** | Supports 1 × 1, 2 × 2, 4 × 4 | |
| **Decimation** | Supports 1 × 1, 2 × 2, 4 × 4 | |
| **Reverse image** | Supports horizontal and vertical reverse image output | |
| ***Electrical feature*** | | |
| **Data interface** | USB 3.0 | |
| **Digital I/O** | Bi-directional non-isolated I/O × 2 (Line 2, Line 5) | |
| **Power supply** | USB 3.0 power supply | |
| **Power consumption** | Typ. 1.5 W @ 5 VDC (USB power supply) | Typ. 2 W @ 5 VDC (USB power supply) |
| ***Mechanical*** | | |
| **Lens mount** | Single board camera: none<br>C-mount camera: C-mount<br>M12-mount camera: M12-mount | |
| **Dimension** | Single board camera: 32.5 mm × 32.5 mm × 1.6 mm (1.3" × 1.3" × 0.1")<br>C-mount camera: 35 mm × 35 mm × 8.6 mm (1.4" × 1.4" × 0.3")<br>M12-mount camera: 35 mm × 35 mm × 8.6 mm (1.4" × 1.4" × 0.3") | |
| **Weight** | Single board camera: Approx. 10 g (0.02 lb.)<br>C-mount camera: Approx. 30 g (0.07 lb.)<br>M12-mount camera: Approx. 30 g (0.07 lb.) | |
| **Temperature** | Working temperature: 0 °C to 50 °C (32 °F to 122 °F)<br>Storage temperature: −30 °C to 80 °C (−22 °F to 176 °F) | |
| **Humidity** | 20% RH to 80% RH (no condensation) | |
| ***General*** | | |
| **Client software** | MVS or third-party software with USB3 Vision Protocol | |
| **Operating system** | 32/64-bit Windows 7/10, 64-bit Windows 11, and 32/64-bit Linux | |
| **Compatibility** | USB3 Vision, GenICam | |
| **Certification** | CE, RoHS, KC | |

## Dimension

Singleboardcamera:

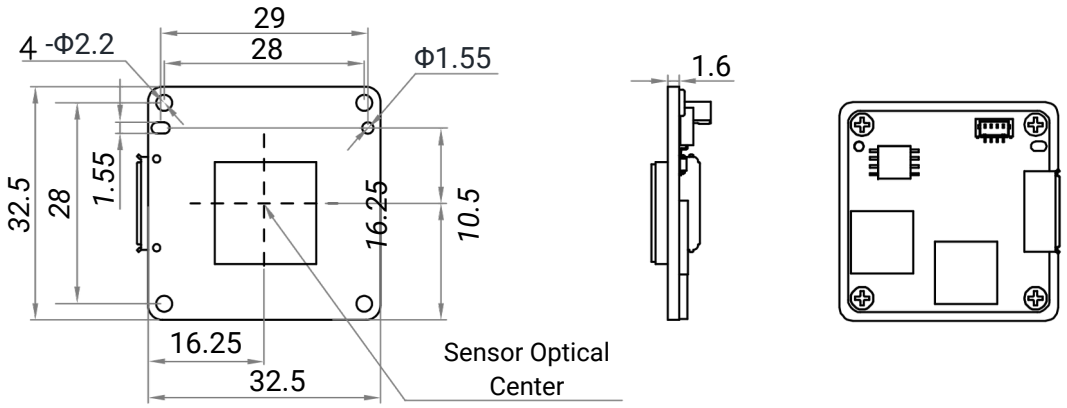


Unit: mm

C-mount camera:

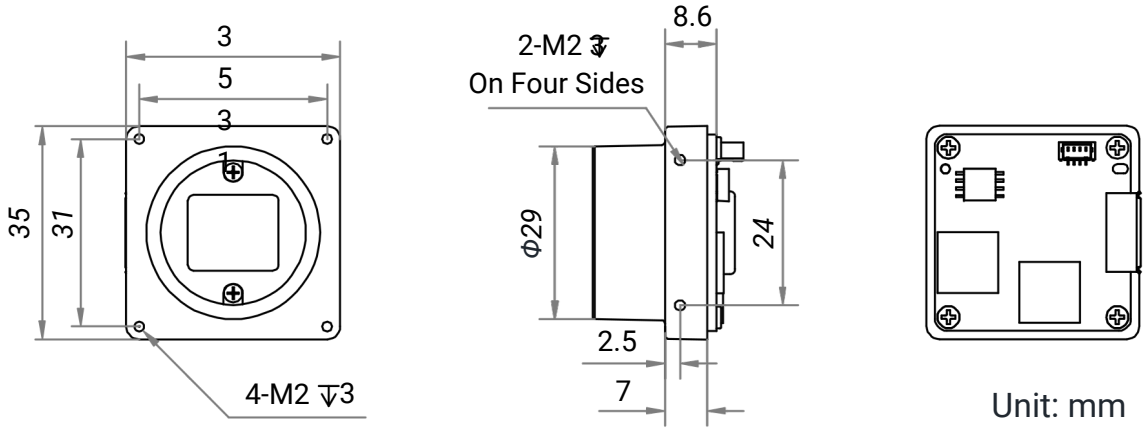


Unit: mm

M12-mount camera:

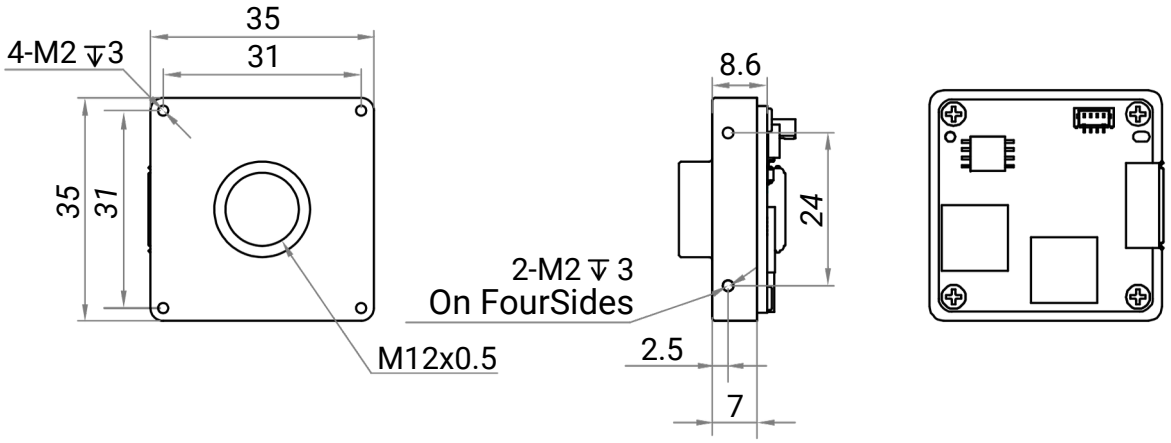


Unit: mm

Hangzhou Hikrobot Co. Ltd.
en.hikrobotics.com

VISCON TECHNOLOGY CO., LTD.
54/88 KHLONGSEE, KHLONG LUANG DISTRICT, PATHUM THANI 12120 THAILAND
TEL : 02-0009297
MB : 0809293068
E-MAIL : SALE@VISCONTECHNOLOGY.COM

© Hangzhou Hikrobot Co., Ltd. All Rights Reserved.
Hangzhou Hikrobot does not tolerate any infringement. Any organization or individual may not imitate or reproduce in whole or in part of the content. The data herein is based on Hikrobot's internal evaluation. Actual data may vary depending on specific configuration and operating condition. The information herein is subject to change without notice All the content has been checked conscientiously. Nevertheless, Hikrobot shall not be liable to damages resulting from errors, inconsistencies or omissions.