MV-CB120-10UM/UC V4

12MP1/1.7"CMOSUSB3.0BoardLevelCamera

Introduction

MV-CB120-10UM/UC V4 camera adopts Sony® IMX226 sensor to provide high-quality image and transmit images in real time, and max. frame rate can reach 30 fps. With single board design, it is small in size, whichcan meet different spatial requirements.

Key Feature

- Supports auto and manual adjustment for gain, exposure control, white balance, Gamma, LUT, etc. Adopts image interpolation
- algorithm for color camera to have better color correction. Power supply and data
- transmission via USB3.0 interface. Compatible with USB3 Vision Protocol,
- GenlCam standard, and the third-party software based on these protocol and standard.

Available Model

Single board mono camera: MV-CB120-10UM-B V4
Single board color camera: MV-CB120-10UC-B V4
C-mount mono camera: MV-CB120-10UM-C V4
C-mount color camera: MV-CB120-10UC-C V4
M12-mount mono camera: MV-CB120-10UM-S V4
M12-mount color camera: MV-CB120-10UC-S V4

Sensor Quantum Efficiency

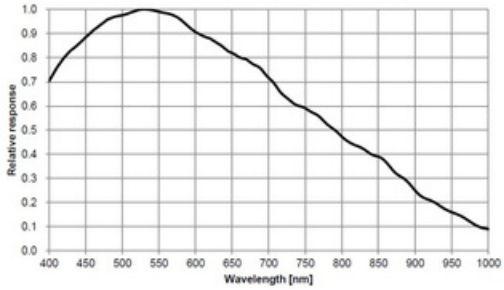

MV-CB120-10UM V4

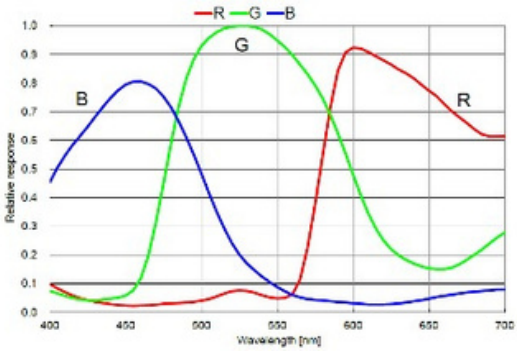

MV-CB120-10UC V4

Applicable Industry

Electronic semiconductor,factory automation, logistics, liquor and beverage, medicine packing, etc.

Specification

Model *Camera*	MV-CB120-10UM V4	MV-CB120-10UC V4
Sensor type		
Sensor model	CMOS, rolling shutter	
Pixel size	Sony® IMX226	
Sensor size	1.85 μm × 1.85 μm	
Resolution Max.	1/1.7"	
frame rate	4032 × 3036	
Dynamic range	30 fps @ 4032 × 3036 Mono 8	30 fps @ 4032 × 3036 Bayer RG 8
SNR Gain	64.6 dB	
Exposure time	39.9 dB	
Exposure mode	0 dB to 20 dB	
Mono/color	33 μs to 2 sec	
	Supports Off/Once/Continuous exposure mode, and Global Reset.	
	Mono	Color
Pixel format	Mono 8/10/10Packed/12/12Packed	Mono8/10/12 Bayer RG 8/10/10Packed/12/12Packed YUV422Packed, YUV422_YUYV_Packed RGB8, BGR8
Binning	Supports 1 × 1, 2 × 2, 4 × 4	
Decimation	Supports 1 × 1, 2 × 2, 4 × 4	
Reverse image	Supports horizontal and vertical reverse image output	
Electrical feature		
Data interface	USB 3.0	
Digital I/O	Bi-directional non-isolated I/O × 2 (Line 2, Line 5)	
Power supply	USB 3.0 power supply	
Power consumption	Typ. 1.5 W @ 5 VDC (USB power supply)	Typ. 2 W @ 5 VDC (USB power supply)
Mechanical		
Lens mount	Single board camera: none C-mount camera: C-mount M12-mount camera: M12-mount	
Dimension	Single board camera: 32.5 mm × 32.5 mm × 1.6 mm (1.3" × 1.3" × 0.1") C-mount camera: 35 mm × 35 mm × 8.6 mm (1.4" × 1.4" × 0.3") M12-mount camera: 35 mm × 35 mm × 8.6 mm (1.4" × 1.4" × 0.3")	
Weight	Single board camera: Approx. 10 g (0.02 lb.) C-mount camera: Approx. 30 g (0.07 lb.) M12-mount camera: Approx. 30 g (0.07 lb.)	
Temperature	Working temperature: 0 °C to 50 °C (32 °F to 122 °F) Storage temperature: −30 °C to 80 °C (−22 °F to 176 °F)	
Humidity	20% RH to 80% RH (no condensation)	
General		
Client software	MVS or third-party software with USB3 Vision Protocol	
Operating system	32/64-bit Windows 7/10, 64-bit Windows 11, and 32/64-bit Linux	
Compatibility	USB3 Vision, GenICam	
Certification	CE, RoHS, KC	

Dimension

Singleboardcamera:

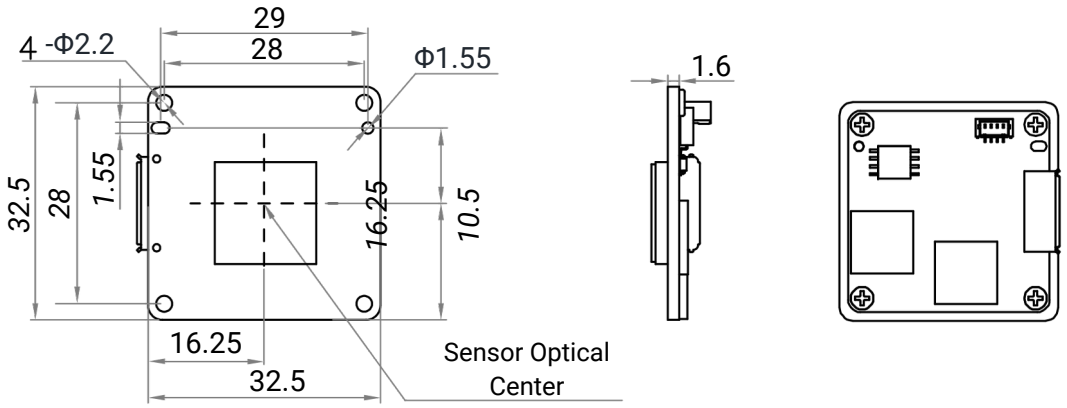

Unit: mm

C-mount camera:

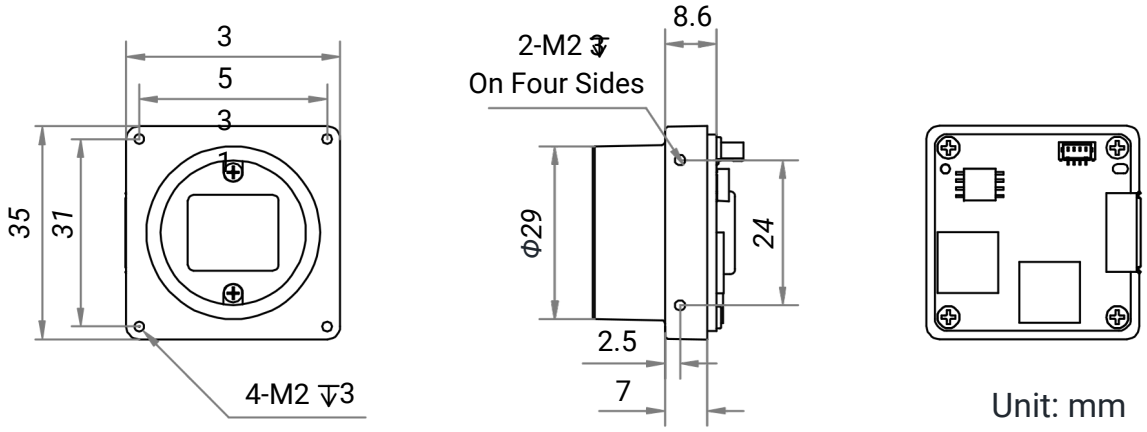

Unit: mm

M12-mount camera:

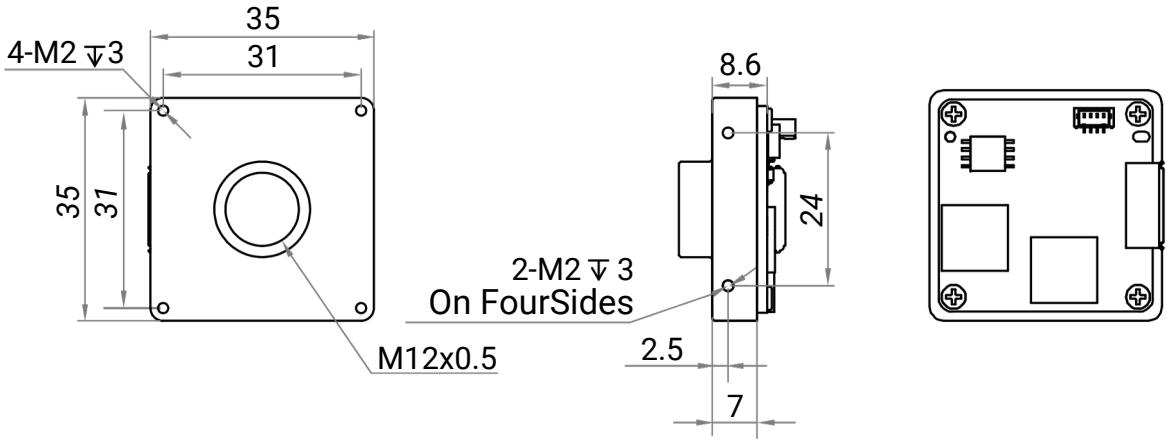

Unit: mm

Hangzhou Hikrobot Co. Ltd.
en.hikrobotics.com

VISCON TECHNOLOGY CO., LTD.
54/88 KHLONGSEE, KHLONG LUANG DISTRICT, PATHUM THANI 12120 THAILAND
TEL : 02-0009297
MB : 0809293068
E-MAIL : SALE@VISCONTECHNOLOGY.COM

© Hangzhou Hikrobot Co., Ltd. All Rights Reserved.
Hangzhou Hikrobot does not tolerate any infringement. Any organization or individual may not imitate or reproduce in whole or in part of the content. The data herein is based on Hikrobot's internal evaluation. Actual data may vary depending on specific configuration and operating condition. The information herein is subject to change without notice All the content has been checked conscientiously. Nevertheless, Hikrobot shall not be liable to damages resulting from errors, inconsistencies or omissions.