MV-CH120-90Y1M/C

12MPCMOSCoaXPressAreaScanCamera

GEN<i>CAM

Introduction

MV-CH120-90Y1M/C camera adopts Gpixel GMAX3412 sensor to provide high quality image. It uses 1-link CXP-12 interface to transmit non-compressed images in real time, and its max. frame rate can reach 93.9 fps in full resolution.

viscontechnology.com

Key Feature

- Resolution of 4096 × 3072, pixel size of 3.4 μm × 3.4 μm.
- Adopts global shutter CMOS sensor to provide high dynamic range, SNR, and high-quality image.
- Adopts CXP-12 interface to transmit data.
- Supports Off, Once, and Continuous exposure modes.
- Compatible with CoaXPress Protocol and GenICam Standard.

Available Model

- Mono camera without heat sink: MV-CH120-90Y1M-NN
- Color camera without heat sink: MV-CH120-90Y1C-NN
- Mono camera with heat sink: MV-CH120-90Y1M-NH
- Color camera with heat sink: MV-CH120-90Y1C-NH

Applicable Industry

Electron semiconductor,PCB AOI, 3D application, motion capture,etc.

Sensor Quantum Efficiency

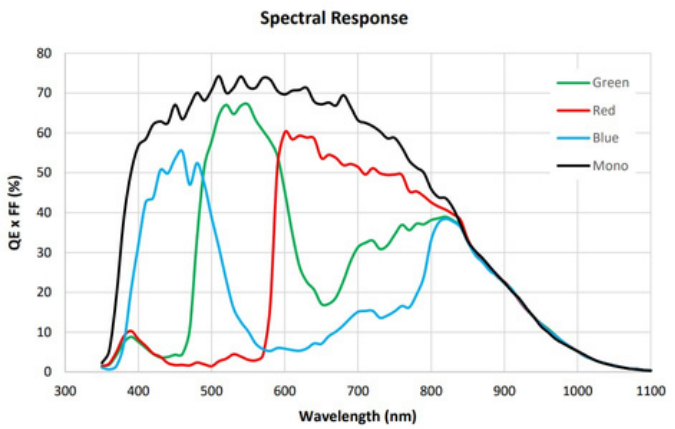

viscontechnology.com

Specification

Model	MV-CH120-90Y1M	MV-CH120-90Y1C
Performance		
Sensor type	CMOS, global shutter	
Sensor model	Gpixel GMAX3412	
Pixel size Sensor	3.4 μm × 3.4 μm	
size Resolution	1.1"	
Max. frame rate	4096 × 3072	
Dynamic range	93.9 fps @ 4096 × 3072 Mono 8	93.9 fps @ 4096 × 3072 Bayer GB 8
SNR Gain	59.7 dB	
Exposure time	39 dB	
Exposure mode	0 dB to 6.1 dB	
Mono/color Pixel	6 μs to 10 sec	
format Binning	Off/Once/Continuous exposure mode	
Decimation	Mono	Color
Reverse image	Mono 8/10/12	Bayer GB 8/10/12
Electrical feature	Supports 1 × 1, 1 × 2, 1 × 4, 2 ×1, 2 × 2, 2 × 4, 4 × 1, 4 × 2, 4 × 4	
Data interface	Supports 1 × 1, 1 × 2, 1 × 4, 2 ×1, 2 × 2, 2 × 4, 4 × 1, 4 × 2, 4 × 4	
Digital I/O	Supports horizontal and vertical reverse image output	
	CoaXPress with Micro-BNC interface	
	6-pin P7 connector provides power and I/O, including opto-isolated input × 1 (Line 0), opto-isolated output × 1 (Line 1), bi-directional non-isolated I/O × 1 (Line 2)	
Power supply	12 VDC to 24 VDC, supports PoCXP	
Power consumption	Typ. 5 W @ 12 VDC	
Mechanical		
Lens mount	C-mount	
Dimension	Device with heat sink: 29 mm × 85 mm × 42 mm (1.1" × 3.3" × 1.7") Device without heat sink: 29 mm × 29 mm × 42 mm (1.1" × 1.1" × 1.7")	
Weight	Device with heat sink: Approx. 170 g (0.4 lb.) Device without heat sink: Approx. 90 g (0.2 lb.)	
Ingress protection	IP40 (under proper lens installation and wiring)	
Temperature	Working temperature for device with heat sink: 0 °C to 50 °C (32 °F to 122 °F) Working temperature for device without heat sink: 0 °C to 40 °C (32 °F to 104 °F) Storage temperature: −30 °C to 80 °C (−22 °F to 176 °F)	
Humidity *General*	20% RH to 95% RH (no condensation)	
Client software		
Operating system	MVS or frame grabber software meeting with CoaXPress Protocol	
Compatibility	32/64-bit Windows 7/10, 64-bit Window 11, and 32/64-bit Linux	
Certifications	CoaXPress, GenICam	
	CE, RoHS, KC	

Dimension

Devicewithoutheat sink

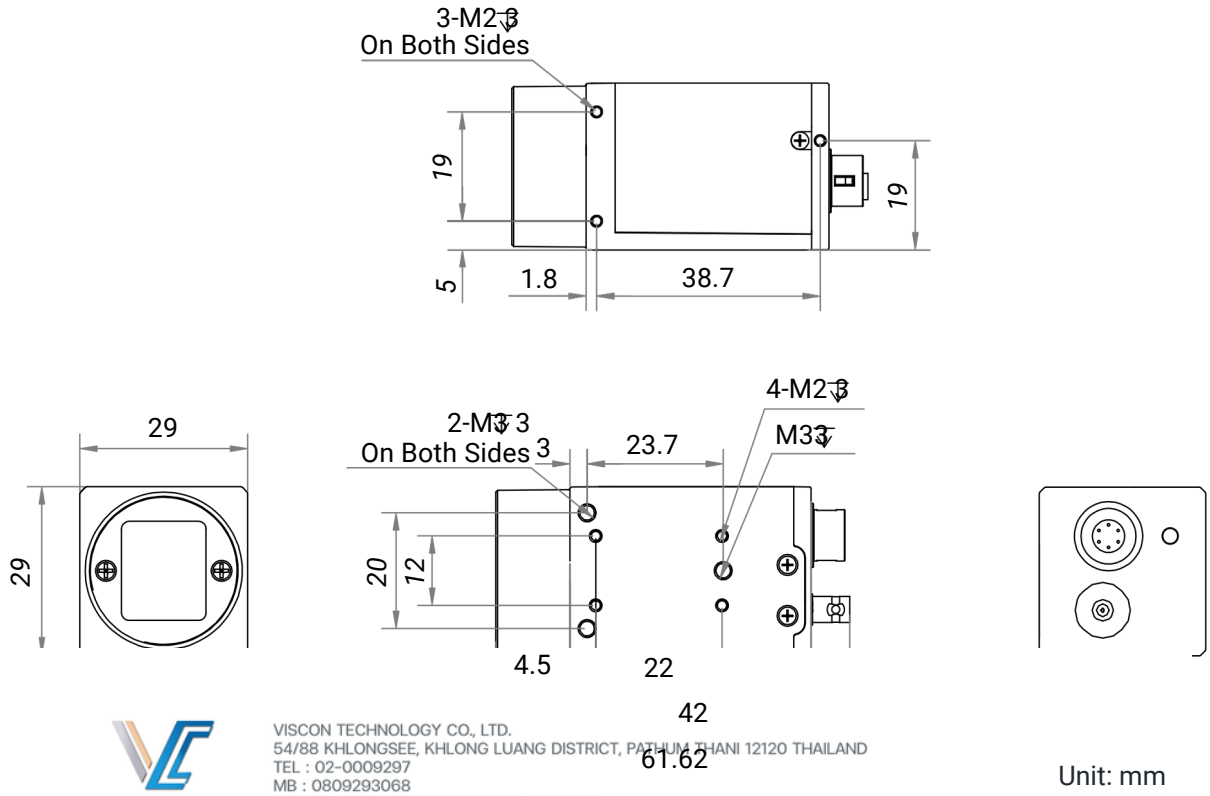

VISCON TECHNOLOGY CO., LTD.
54/88 KHLONGSEE, KHLONG LUANG DISTRICT, PATHUM THANI 12120 THAILAND
TEL : 02-0009297
MB : 0809293068
E-MAIL : SALE@VISCONTECHNOLOGY.COM

Unit: mm

Device with heat sink

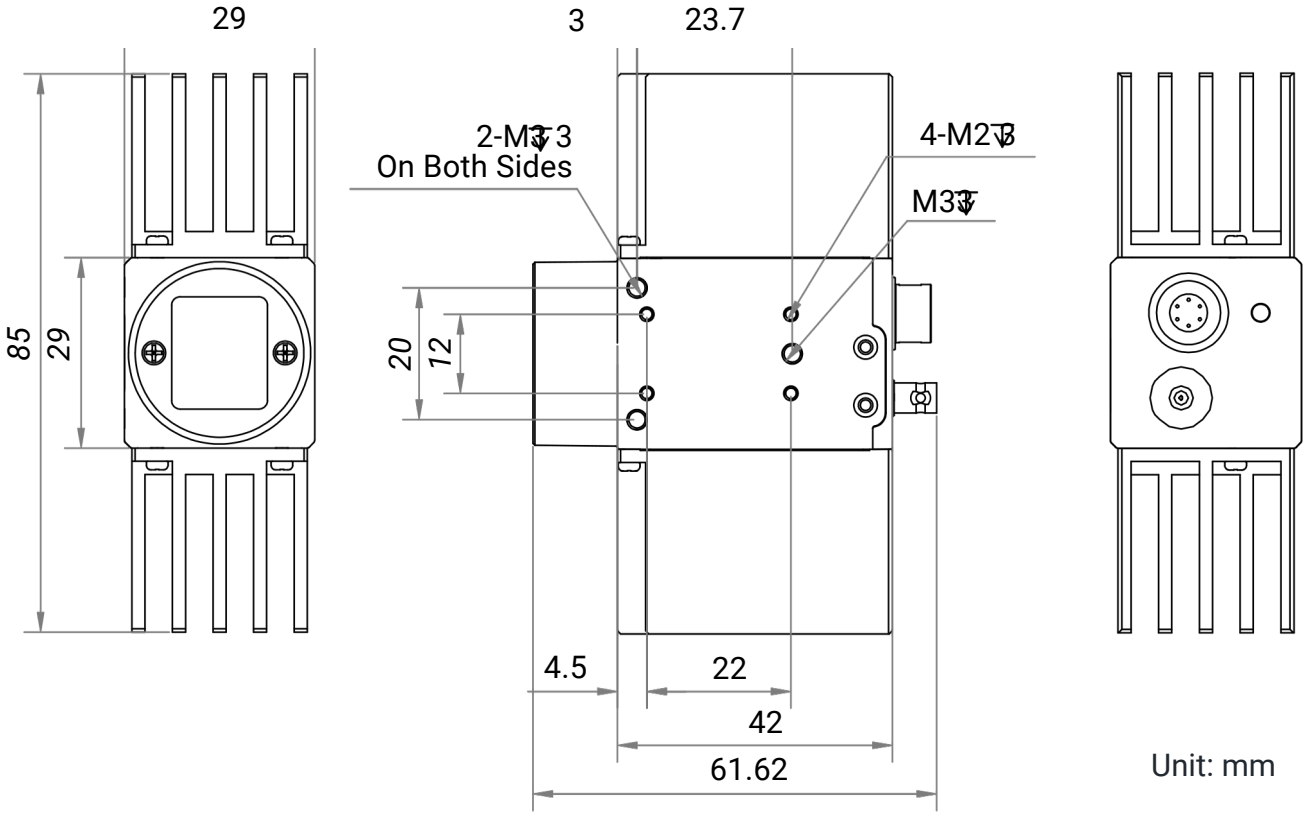

Unit: mm

VISCON TECHNOLOGY CO., LTD.
54/88 KHLONGSEE, KHLONG LUANG DISTRICT, PATHUM THANI 12120 THAILAND
TEL : 02-0009297
MB : 0809293068
E-MAIL : SALE@VISCONTECHNOLOGY.COM

© Hangzhou Hikrobot Co., Ltd. All Rights Reserved.
Hangzhou Hikrobot does not tolerate any infringement. Any organization or individual may not imitate or reproduce in whole or in part of the content. The data herein is based on Hikrobot's internal evaluation. Actual data may vary depending on specific configuration and operating condition. The information herein is subject to change without notice All the content has been checked conscientiously. Nevertheless, Hikrobot shall not be liable to damages resulting from errors, inconsistencies or omissions.