MV-CH123-10UM/UC

12.3MP1/1.1"CMOSUSB3.0AreaScan Camera

Introduction

MV-CH123-10UM/UC camera adopts Sony® IMX545 sensor to provide high-quality images. It uses USB 3.0 interface to transmit non-compressed images in real time, and its max. frame rate can reach 31.5 fps in full resolution.

Key Feature

- Supports LSC, sequencer, passive transfer function, etc.
- Color camera supports interpolation, white balance, CCM, Super Palette, Super Bayer, etc. Adopts brand new design and supports four-side installation. Adopts compact design for small spatial installation.
- Compatible with USB3 Vision Protocol, GenICam Standard, and the third-party software based on the protocol and standard.

Dimension

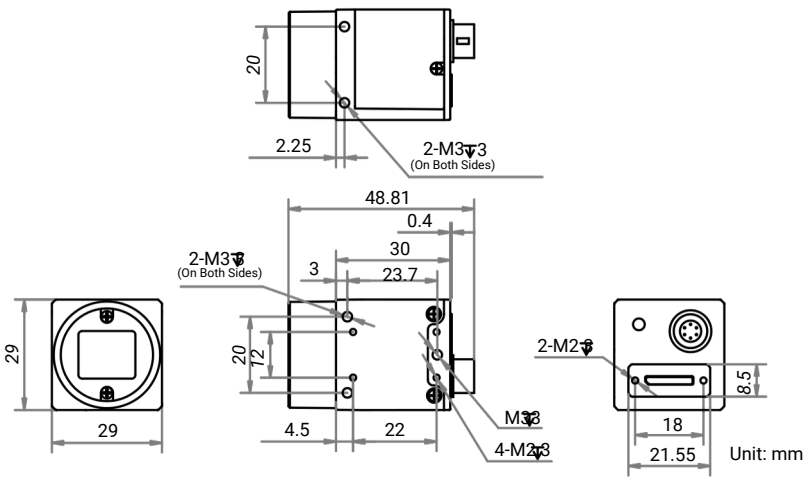

Available Model

Mono camera: MV-CH123-10UM

Color camera: MV-CH123-10UC

Applicable Industry

Electronic semiconductor, factory automation, liquor and beverage, medicine packing,screenAOIdetection,etc.

Sensor Quantum Efficiency

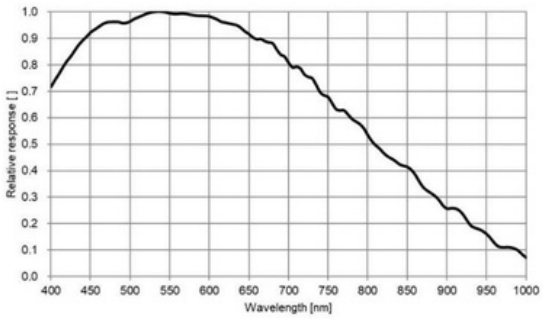

MV-CH123-10UM

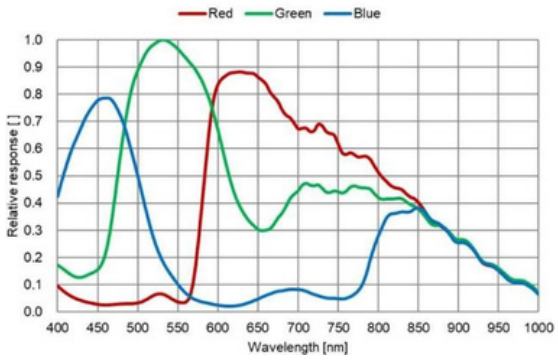

MV-CH123-10UC

Specification

Model	MV-CH123-10UM	MV-CH123-10UC
Performance		
Sensor type	CMOS, global shutter	
Sensor model	Sony® IMX545	
Pixel size	2.74 μm × 2.74 μm	
Sensor size	1/1.1"	
Resolution	4096 × 3000	
Max. frame rate	31.5 fps @ 4096 × 3000 Mono 8	31.5 fps @ 4096 × 3000 Bayer RG 8
Dynamic range	69.4 dB	
SNR Gain	39.4 dB	
Exposure time	0 dB to 24 dB	
	UltraShort exposure mode: 1 μs to 2 μs Standard exposure mode: 3 μs to 10 sec	
Exposure mode	Off/Once/Continuous exposure mode	
Mono/color	Mono	Color
Pixel format	Mono 8/10/10Packed/12/12Packed	Mono 8/10/12 Bayer RG 8/10/10Packed/12/12Packed YUV422Packed, YUV422_YUYV_Packed RGB 8, BGR 8
Binning	Supports 1 × 1, 2 × 2, 4 × 4	
Decimation	Supports 1 × 1, 2 × 2, 4 × 4	
Reverse image	Supports horizontal and vertical reverse image output	
Electrical features		
Data interface	USB 3.0, compatible with USB 2.0	
Digital I/O	6-pin P7 connector provides power and I/O, including opto-isolated input × 1 (Line 0), opto-isolated output × 1 (Line 1), bi-directional non-isolated I/O × 1 (Line 2).	
Power supply	9 VDC to 24 VDC, supports USB 3.0 power supply	
Power consumption	Typ. 2.1 W @ 5 VDC (USB 3.0 provides power supply)	Typ. 2.3 W @ 5 VDC (USB 3.0 provides power supply)
Mechanical		
Lens mount	C-mount	
Dimension	29 mm × 29 mm × 30 mm (1.1" × 1.1" × 1.2")	
Weight	Approx. 80 g (0.2 lb.)	
Ingress protection	IP40 (under proper lens installation and wiring)	
Temperature	Working temperature: −10 °C to 50 °C (14 °F to 122 °F) Storage temperature: −30 °C to 70 °C (−22 °F to 158 °F)	
Humidity	20% RH to 95% RH (no condensation)	
General		
Client software	MVS or third-party software meeting with USB3 Vision Protocol	
Operating system	32/64-bit Windows 7/10, 64-bit Windows 11, and 32/64-bit Linux	
Compatibility	USB3 Vision, GenICam	
Certification	CE, RoHS, KC	

VISCON TECHNOLOGY CO., LTD.
54/88 KHLONGSEE, KHLONG LUANG DISTRICT, PATHUM THANI 12120 THAILAND
TEL : 02-0009297
MB : 0809293068
E-MAIL : SALE@VISCONTECHNOLOGY.COM

© Hangzhou Hikrobot Co., Ltd. All Rights Reserved.
Hangzhou Hikrobot does not tolerate any infringement. Any organization or individual may not imitate or reproduce in whole or in part of the content. The data herein is based on Hikrobot's internal evaluation. Actual data may vary depending on specific configuration and operating condition. The information herein is subject to change without notice All the content has been checked conscientiously. Nevertheless, Hikrobot shall not be liable to damages resulting from errors, inconsistencies or omissions.