MV-CH250-90TM/TC

25MP1.1"CMOS10GigEAreaScanCamera

Introduction

MV-CH250-90TM/TC camera adopts Gpixel GMAX0505 sensor to provide high-quality image. It uses 10 GigE interface to transmit non-compressed image in real time, and itsmax. framerate can reach 41.5 fps in full resolution.

Key Feature

- Resolution of 5120 × 5120, pixel size of 2.5 μm × 2.5 μm.
- Adopts 10 GigE interface providing maximum transmission distance of 100 meters.
- Supports adjustment for exposure time, gain, Look-Up Table (LUT), Gamma correction, etc.
- Mounting holes on panels for flexible installation.
- Compatible with GigE Vision Protocol V2.0, GenlCam Standard, andthird-party software based on protocols.

Applicable Industry

SMT/PCB AOI, FPD, railway related applications, photovoltaic industry, etc.

Available Model

- C-mountwithfan, mono: MV-CH250-90TM-C-NF
- M58-mount with fan, mono: MV-CH250-90TM-M58S-NF
- C-mount with fan, color: MV-CH250-90TC-C-NF
- M58-mount with fan, color: MV-CH250-90TC-M58S-NF

Sensor Quantum Efficiency

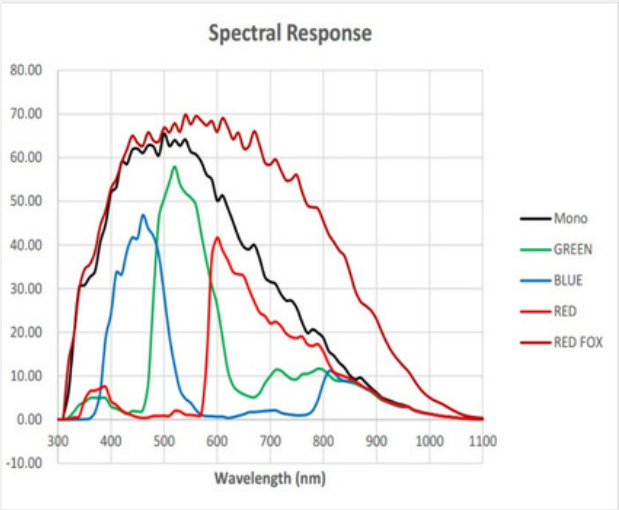

Specification

Model	MV-CH250-90TM	MV-CH250-90TC
Performance		
Sensor type	CMOS, global shutter Gpixel GMAX0505	
Sensor model	2.5 μm × 2.5 μm 1.1" 5120 × 5120 41.5	
Pixel size	fps @ 5120 × 5120 Mono 8 63 dB 36 dB	
Sensor size	2.0x to 5.0x UltraShort exposure mode: 3	
Resolution Max.	μs to 8 μs Standard exposure mode: 9 μs	
frame rate	to 10 sec Off/Once/Continuous exposure	41.5 fps @ 5120 × 5120 Bayer BG 8
Dynamic range	mode Mono	
SNR Gain		
Exposure time		
Exposure mode		
Mono/color		Color
Pixel format	Mono 8/10/10Packed/12/12Packed	Mono 8/10/12, Bayer BG 8/10/10Packed/12/12Packed, YUV422Packed, YUV422_YUYV_Packed RGB 8, BGR 8
Binning	Supports 1 × 1, 1 × 2, 1 × 4, 2 × 1, 2 × 2, 2 × 4, 4 × 1, 4 × 2, 4 × 4	
Decimation	Supports 1 × 1, 1 × 2, 1 × 4, 2 × 1, 2 × 2, 2 × 4, 4 × 1, 4 × 2, 4 × 4	
Reverse image	Supports horizontal and vertical reverse image output	
Electrical feature		
Data interface	10 Gigabit Ethernet (10000 Mbit/s), compatible with Gigabit Ethernet (1000 Mbit/s)	
Digital I/O	12-pin P10 connector provides power and I/O, including opto-isolated input × 1 (Line 0), opto-isolated output × 1 (Line 1), bi-directional non-isolated I/O × 1 (Line 2), and RS-232 × 1	
Power supply	9 VDC to 24 VDC	
Power consumption	Typ. 9.7 W @ 12 VDC	Typ. 10.0 W @ 12 VDC
Mechanical		
Lens mount	C-mount M58*0.75, flange back length 11.48 mm	
Dimension	74 mm × 74 mm × 78.8 mm (2.9" × 2.9" × 3.1")	
Weight	C-mount: Approx. 590 g (1.3 lb.) M58-mount: Approx. 550 g (1.2 lb.)	
Ingress protection	IP40 (under proper lens installation and wiring)	
Temperature	Working temperature: 0 °C to 50 °C (32 °F to 122 °F) Storage temperature: −30 °C to 70 °C (−22 °F to 158 °F)	
Humidity	20% RH to 95% RH (no condensation)	
General		
Client software	MVS or third-party software meeting with GigE Vision Protocol	
Operating system	32/64-bit Windows 7/10, 64-bit Windows 11, and 32/64-bit Linux	
Compatibility	GigE Vision V2.0, GenICam	
Certification	CE, RoHS, KC	

Dimension

C-mountcamera:

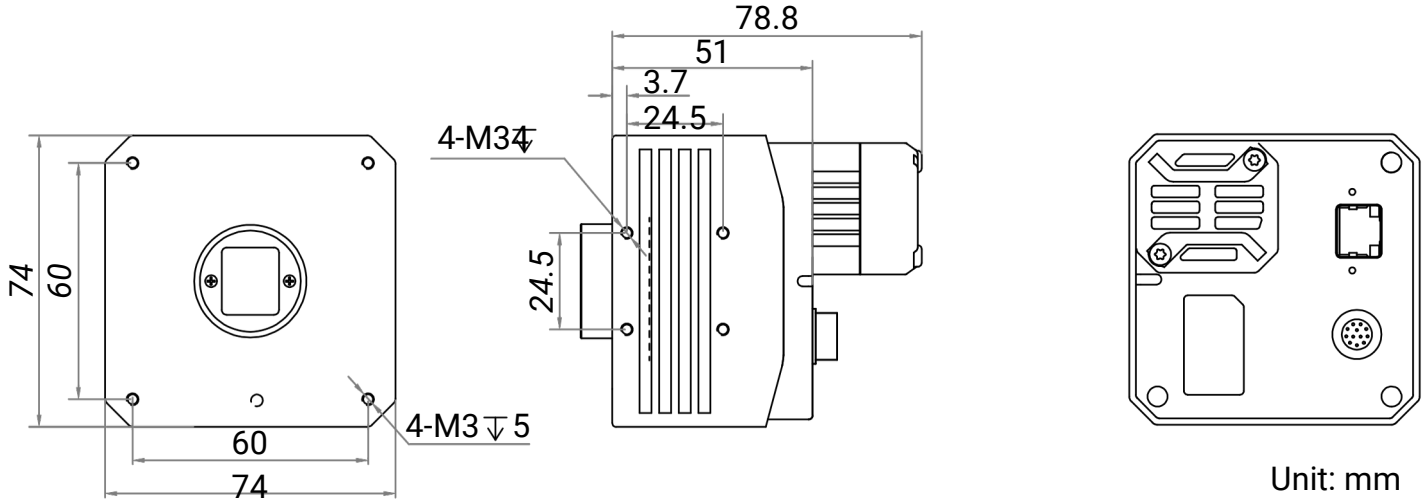

Unit: mm

M58-mount camera:

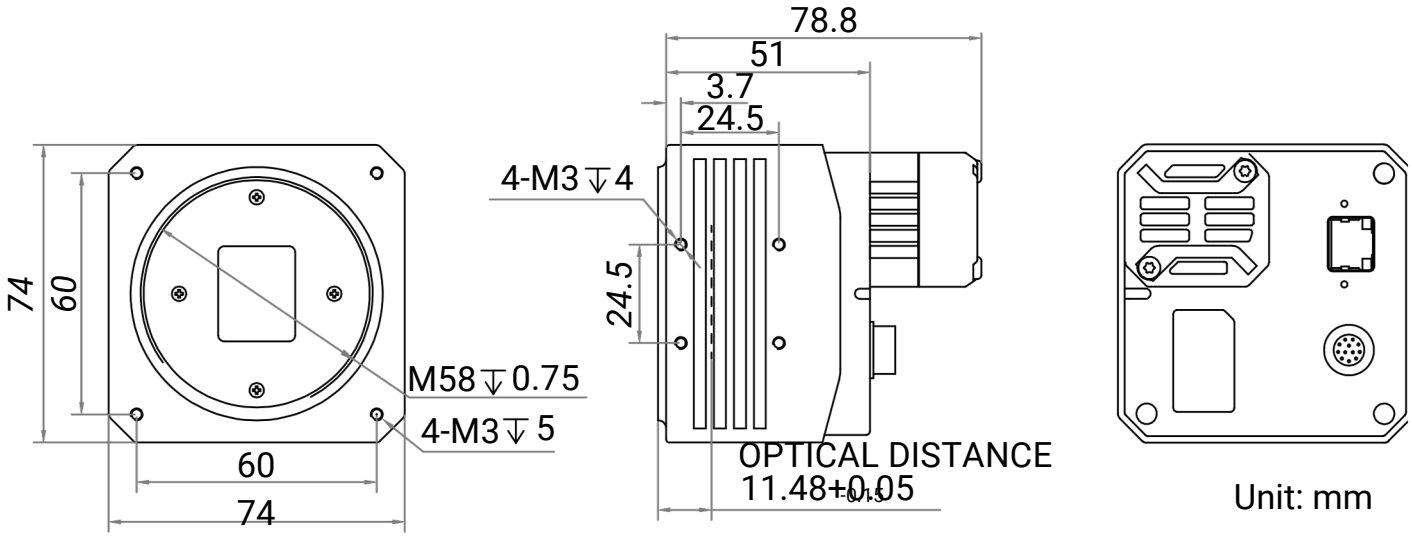

Unit: mm

Hangzhou Hikrobot Co. Ltd.
en.hikrobotics.com

VISCON TECHNOLOGY CO., LTD.
54/88 KHLONGSEE, KHLONG LUANG DISTRICT, PATHUM THANI 12120 THAILAND
TEL : 02-0009297
MB : 0809293068
E-MAIL : SALE@VISCONTECHNOLOGY.COM

© Hangzhou Hikrobot Co., Ltd. All Rights Reserved.
Hangzhou Hikrobot does not tolerate any infringement. Any organization or individual may not imitate or reproduce in whole or in part of the content. The data herein is based on Hikrobot's internal evaluation. Actual data may vary depending on specific configuration and operating condition. The information herein is subject to change without notice All the content has been checked conscientiously. Nevertheless, Hikrobot shall not be liable to damages resulting from errors, inconsistencies or omissions.