MV-CH250-90YM/YC

25MPCMOSCoaXPressAreaScanCamera

GEN<i>CAM

Introduction

MV-CH250-90YM/YC camera adopts Gpixel GMAX0505 sensor to provide high quality image. It uses CXP-12 interface to transmit data in real time, and its max. frame rate can reach 150 fpsin full resolution.

Applicable Industry

Electron semiconductor,PCB AOI, 3D application, motion capture, etc.

Sensor Quantum Efficiency

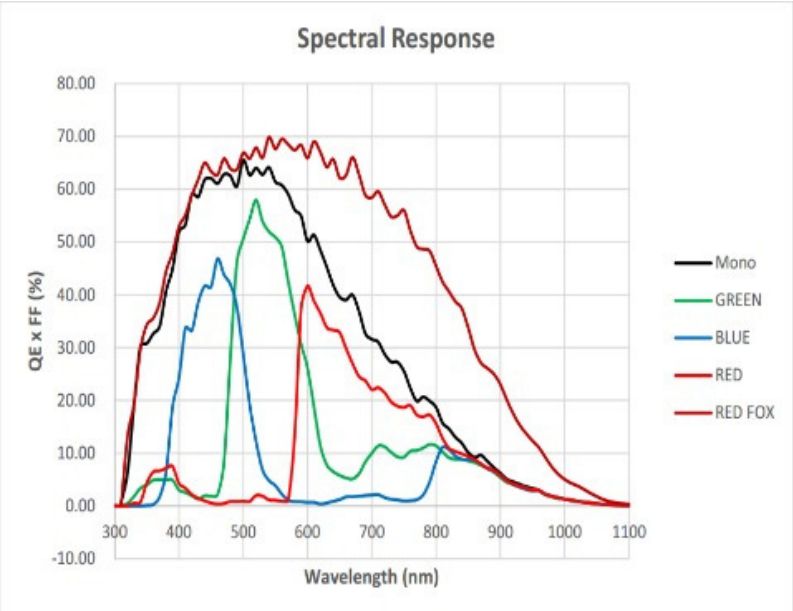

Key Feature

- Resolution of 5120 × 5120, pixel size of 2.5 μm × 2.5 μm. Adopts global shutter CMOS sensor to provide high dynamic range and high- quality image. Adopts CXP-12 interface to transmit data. Compatible with CoaXPress Protocol, GenlCam Standard, and third-party software based on the protocol and standard.

Available Model

- C-mountwithoutfan, mono camera: MV-CH250-90YM-C-NN (V2.0)
- M58-mount without fan, mono camera: MV-CH250-90YM-M58S-NN (V2.0)
- C-mount without fan, color camera: MV-CH250-90YC-C-NN (V2.0)
- M58-mount without fan, color camera: MV-CH250-90YC-M58S-NN (V2.0)

Specification

Model	MV-CH250-90YM	MV-CH250-90YC
Performance		
Sensor type	CMOS, global shutter	
Sensor model	Gpixel GMAX0505	
Pixel size	2.5 μm × 2.5 μm	
Sensor size	1.1"	
Resolution Max.	5120 × 5120	
frame rate	150 fps @ 5120 × 5120 Mono 8	150 fps @ 5120 × 5120 Bayer BG 8
Dynamic range	63 dB	
SNR Gain	36 dB	
Exposure time	2.5 ×	
	UltraShort exposure mode: 3 μs to 8 μs	
	Standard exposure mode: 10 μs to 10 sec	
Exposure mode	Off/Once/Continuous exposure mode	
Mono/color	Mono	Color
Pixel format	Mono 8/10/12	Bayer BG 8/10/12
Binning	Supports 1 × 1, 1 × 2, 1 × 4, 2 ×1, 2 × 2, 2 × 4, 4 × 1, 4 × 2, 4 × 4	
Decimation	Supports 1 × 1, 1 × 2, 1 × 4, 2 ×1, 2 × 2, 2 × 4, 4 × 1, 4 × 2, 4 × 4	
Reverse image	Supports horizontal and vertical reverse image output	
Electrical features		
Data interface	CoaXPress with micro-BNC interface	
Digital I/O	12-pin P10 connector provides power and I/O, including opto-isolated input × 1 (Line 0), opto-isolated output × 1(Line 1), bi-directional non-isolated I/O × 1 (Line 2), and RS-232 × 1.	
Power supply	12 VDC to 24 VDC, CXP-0 and CXP-1 support PoCXP	
Power consumption	Typ. 9.9 W @ 12 VDC	Typ. 10 W @ 12 VDC
Mechanical		
Lens mount	C-mount, flange focal length 17.52 mm M58*0.75, flange focal length 11.48 mm	
Dimension	60 mm × 60 mm × 59 mm (2.4" × 2.4" × 2.3") (cooling fins are optional)	
Weight	C-mount without fan, approx. 280 g (0.6 lb.) M58-mount without fan, approx. 285 g (0.6 lb.)	
Ingress protection	IP40 (under proper lens installation and wiring)	
Temperature	Working temperature: 0 °C to 50 °C (32 °F to 122 °F) Storage temperature: −30 °C to 80 °C (−22 °F to 176 °F)	
Humidity	20% RH to 95% RH, no condensation	
General		
Client software	MVS or third-party software meeting with CoaXPress Protocol	
Operating system	32/64-bit Windows XP/7/10/11, 32/64-bit Linux	
Compatibility	CoaXPress, GenICam	
Certifications	CE, RoHS, KC, UL	

Dimension

CamerawithC-mount without fan:

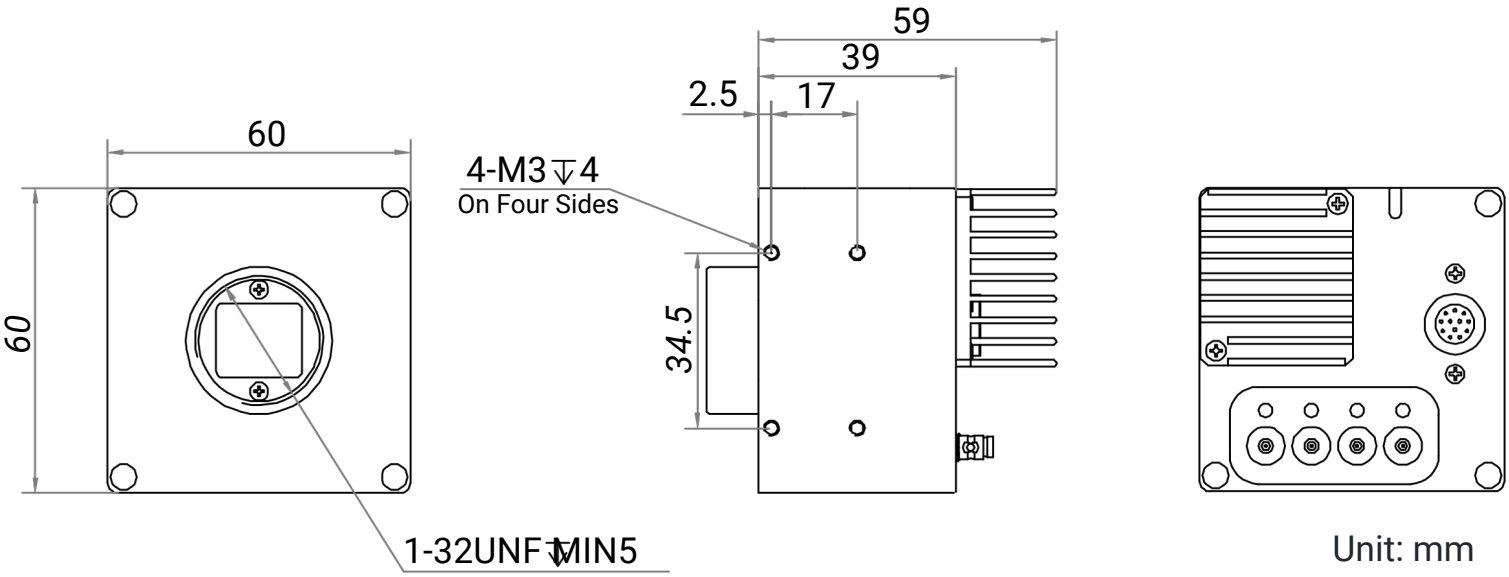

Camera with M58-mount without fan:

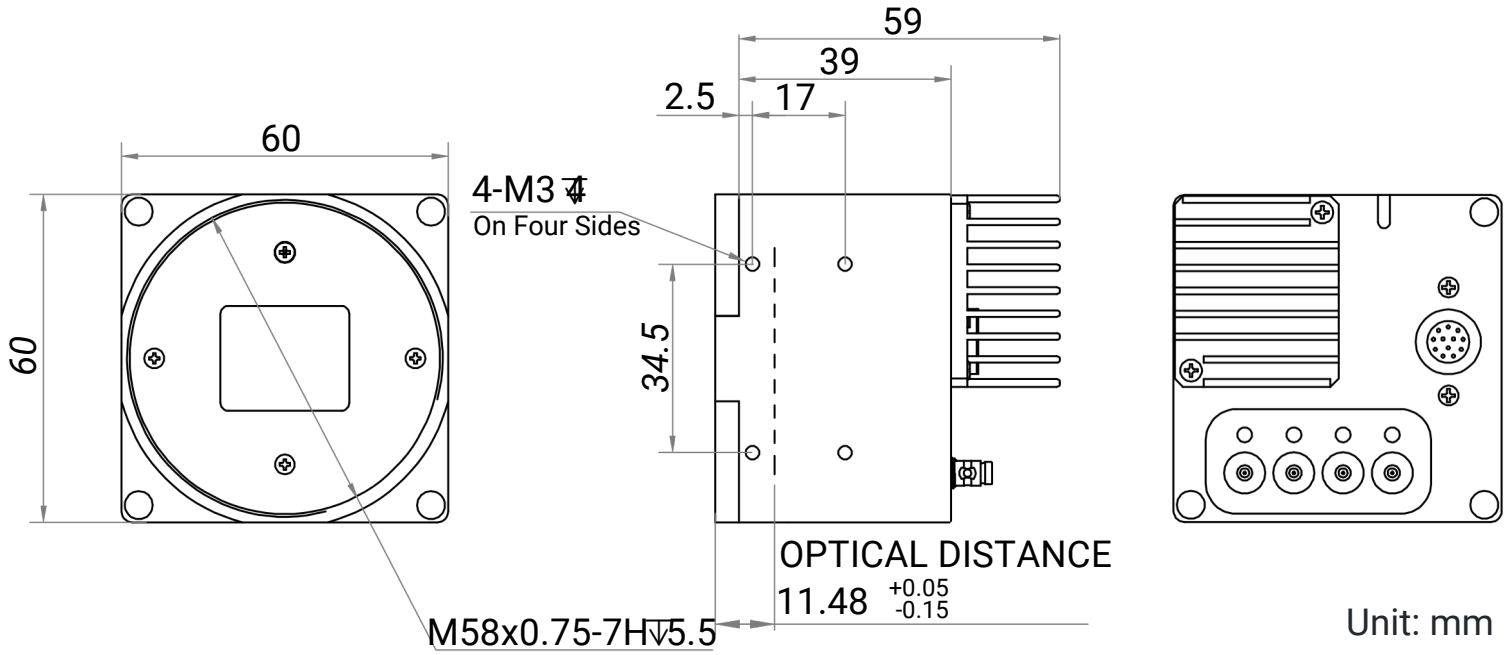

VISCON TECHNOLOGY CO., LTD.
54/88 KHLONGSEE, KHLONG LUANG DISTRICT, PATHUM THANI 12120 THAILAND
TEL : 02-0009297
MB : 0809293068
E-MAIL : SALE@VISCONTECHNOLOGY.COM

© Hangzhou Hikrobot Co., Ltd. All Rights Reserved.
Hangzhou Hikrobot does not tolerate any infringement. Any organization or individual may not imitate or reproduce in whole or in part of the content. The data herein is based on Hikrobot's internal evaluation. Actual data may vary depending on specific configuration and operating condition. The information herein is subject to change without notice All the content has been checked conscientiously. Nevertheless, Hikrobot shall not be liable to damages resulting from errors, inconsistencies or omissions.