MV-CH650-90XM/XC

65MPCMOSCoaXPressAreaScanCamera

GEN<i>CAM

Introduction

MV-CH650-90XM/XC camera adopts Gpixel GMAX3265 sensor and CXP-6 interface to provide high-quality and non-compressed images in real time. Its max. frame ratereaches up to 31.5 fps in full resolution.

Key Feature

- Resolutionof 9344 × 7000, and pixel size of 3.2 μm × 3.2 μm.
- Adopts global shutter CMOS to provide high dynamic range, SNR, and high-quality image.
- Adopts CXP-6 interface to transmit data.
- Compatible with CoaXPress Protocol and GenICam Standard.

Available Model

- M58-mountwith fan, mono: MV-CH650-90XM-M58S-NF
- F-mount with fan, mono: MV-CH650-90XM-F-NF
- M58-mount with fan, color: MV-CH650-90XC-M58S-NF
- F-mount withfan, color:MV-CH650-90XC-F-NF

Applicable Industry

PCBAOI,FPD,high-accuracymeasurement, etc.

Sensor Quantum Efficiency

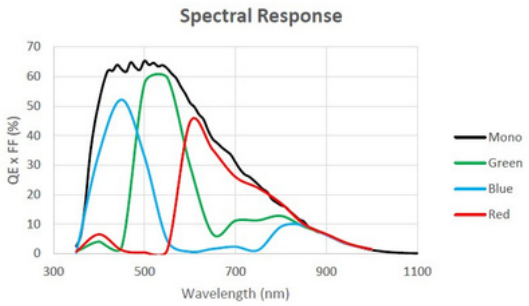

Dimension

F-mount with fan:

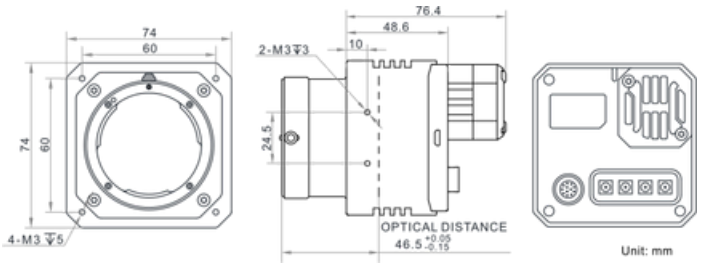

M58-mount with fan:

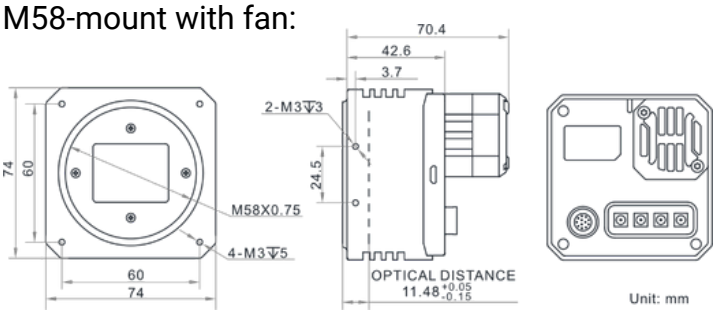

Specification

Model *Camera*	MV-CH650-90XM	MV-CH650-90XC
Sensor type		
Sensor model	CMOS, global shutter	
Pixel size Sensor	Gpixel GMAX3265	
size Resolution	3.2 μm × 3.2 μm	
Max. frame rate	29.9 mm × 22.4 mm	
Dynamic range	9344 × 7000	
SNR Gain	31.5 fps @ 9216 × 7000	31.5 fps @ 9344 × 7000
Exposure time	66 dB	
Exposure mode	40 dB	
Mono/color Pixel	1.25x to 6x	
format Binning	14 μs to 10 sec	
Decimation	Off/Once/Continuous exposure mode	
Reverse image	Mono	Color
Electrical features	Mono 8/10/12	Bayer BG 8/10/12
Data interface	Supports 1 ×1, 1 × 2, 1 × 4, 2 × 1, 2 × 2, 2 × 4, 4 × 1, 4 × 2, 4 × 4	
Digital I/O	Supports 1 ×1, 1 × 2, 1 × 4, 2 × 1, 2 × 2, 2 × 4, 4 × 1, 4 × 2, 4 × 4	
	Supports horizontal and vertical reverse image output	
	CoaXPress with DIN interface	
	12-pin P10 connector provides I/O: opto-isolated input × 1 (Line 0), opto-isolated output × 1 (Line 1), bi-directional non-isolated I/O × 1 (Line 2), and RS-232 × 1.	
Power supply	9 VDC to 24 VDC	
Power consumption	Typ. 10.5 W @ 24 VDC	Typ. 10.2 W @ 24 VDC
Mechanical		
Lens mount	M58*0.75, flange back length 11.48 mm F-mount, flange back length 46.5 mm	
Dimension	M58-mount with fan: 74 mm × 74 mm × 70.4 mm (2.9" × 2.9" × 2.8") F-mount with fan: 74 mm × 74 mm × 76.4 mm (2.9" × 2.9" × 3.0")	
Weight	M58-mount with fan: approx. 470 g (1.0 lb.) F-mount with fan: approx. 500 g (1.1 lb.)	
Ingress protection	IP40 (under proper lens installation and wiring)	
Temperature	Working temperature: 0 °C to 50 °C (32 °F to 122 °F) Storage temperature: −30 °C to 70 °C (−22 °F to 158 °F)	
Humidity	20% RH to 95% RH (no condensation)	
General		
Client software	Frame grabber software meeting with CoaXPress Protocol	
Operating system	32/64-bit Windows 7/10, 64-bit Windows 11 with 8 GB memory or above	
Compatibility	CoaXPress, GenICam	
Certifications	CE, RoHS, KC	

VISCON
VISCON TECHNOLOGY CO., LTD.
54/88 KHLONGSEE, KHLONG LUANG DISTRICT, PATHUM THANI 12120 THAILAND
TEL : 02-0009297
MB : 0809293068
E-MAIL : SALE@VISCONTECHNOLOGY.COM

© Hangzhou Hikrobot Co., Ltd. All Rights Reserved.
Hangzhou Hikrobot does not tolerate any infringement. Any organization or individual may not imitate or reproduce in whole or in part of the content. The data herein is based on Hikrobot's internal evaluation. Actual data may vary depending on specific configuration and operating condition. The information herein is subject to change without notice All the content has been checked conscientiously. Nevertheless, Hikrobot shall not be liable to damages resulting from errors, inconsistencies or omissions.