MV-CH650-90YM/YC

65MPCMOSCoaXPressAreaScanCamera

Introduction

MV-CH650-90YM/YC camera adopts Gpixel GMAX3265 sensor to provide high-quality image. It uses CXP-12 interface to transmit non-compressed images in real time, and its max.

frame rate canreach 71 fps in full resolution.

Key Feature

- Adopts global shutter CMOS to provide high dynamic range, SNR, and high-quality images.
- Adopts CXP-12 interface to transmit data.
- Adopts the low consumption fanless mode to ensure stability during continuous high-speed imaging. Compatible with CoaXPress Protocol, GenlCam Standard.

Available Model

- Mono camera: MV-CH650-90YM-M58S-NN
- Color camera: MV-CH650-90YC-M58S-NN

Applicable Industry

PCB AOI, FPD, 3D, Motion Capture, etc.

Sensor Quantum Efficiency

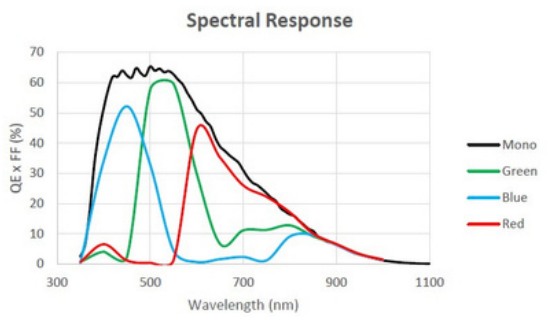

Dimension

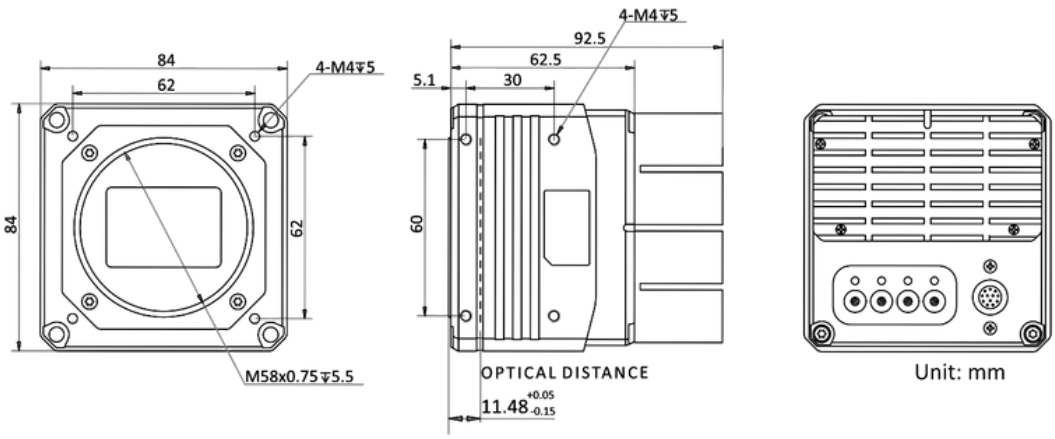

Specification

HIKROBOT

Model	MV-CH650-90YM	MV-CH650-90YC
Camera		
Sensor type	CMOS, global shutter	
Sensor model	Gpixel GMAX3265	
Pixel size	3.2 μm × 3.2 μm	
Sensor size	29.9 mm × 22.4 mm	
Resolution	9344 × 7000	
Max. frame rate	71 fps @ 9344 × 7000	
Dynamic range	66 dB	
SNR	40 dB	
Gain	1.25x	
Exposure time	12 μs to 10 sec	
Exposure mode	Off/Once/Continuous exposure mode	
Mono/color	Mono	Color
Pixel format	Mono 8/10/12	Bayer BG 8/10/12
Binning	Supports 1 × 1, 2 × 2, 4 × 4	
Decimation	Supports 1 × 1, 2 × 2, 4 × 4	
Reverse image	Supports horizontal and vertical reverse image output	
Electrical features		
Data interface	CoaXPress with Micro-BNC interface	
Digital I/O	12-pin P10 connector provides power and I/O, including opto-isolated input × 1 (Line 0), opto-isolated output × 1 (Line 1), bi-directional non-isolated I/O × 1 (Line 2), and RS-232 × 1.	
Power supply	24 VDC, CXP-0 and CXP-1 connectors support PoCXP	
Power consumption	Typ. 13.0 W @ 24 VDC	Typ. 13.2 W @ 24 VDC
Mechanical		
Lens mount	M58*0.75, flange back length 11.48 mm	
Dimension	84 mm × 84 mm × 92.5 mm (3.3" × 3.3" × 3.6")	
Weight	Approx. 650 g (1.4 lb.)	
Ingress protection	IP40 (under proper lens installation and wiring)	
Temperature	Working temperature: 0 °C to 50 °C (32 °F to 122 °F) Storage temperature: −30 °C to 80 °C (−22 °F to 176 °F)	
Humidity	20% RH to 95% RH (no condensation)	
General		
Client software	MVS or frame grabber software meeting with CoaXPress Protocol	
Operating system	32/64-bit Windows 7/10, 64-bit Windows 11 with 8 GB memory or above	
Compatibility	CoaXPress, GenICam	
Certification	CE, RoHS, KC	

VISCON
VISCON TECHNOLOGY CO., LTD.
54/88 KHLONGSEE, KHLONG LUANG DISTRICT, PATHUM THANI 12120 THAILAND
TEL : 02-0009297
MB : 0809293068
E-MAIL : SALE@VISCONTECHNOLOGY.COM

© Hangzhou Hikrobot Co., Ltd. All Rights Reserved.
Hangzhou Hikrobot does not tolerate any infringement. Any organization or individual may not imitate or reproduce in whole or in part of the content. The data herein is based on Hikrobot's internal evaluation. Actual data may vary depending on specific configuration and operating condition. The information herein is subject to change without notice All the content has been checked conscientiously. Nevertheless, Hikrobot shall not be liable to damages resulting from errors, inconsistencies or omissions.