MV-CS032-60GM/GC

3.2MP1/1.8"CMOSGigEAreaScanCamera

Introduction

WithGigEinterface, MV-CS032-60GM/GC camera adopts CMOS global sensor to provide high-quality images and transmit images in real time, and its max. frame rate can reach 38.6 fps in full resolution.

Available Model

- Mono camera: MV-CS032-60GM
- Color camera: MV-CS032-60GC

Applicable Industry

Electronic semiconductor,factory automation, food and beverage, medicine packaging, etc.

Key Feature

- Adoptsbrand new design to reduce power consumption.
- Supports auto or manual adjustment of gain, exposure time, white balance, LUT, Gamma correction, etc., and supports Sequencer function.
- Supports ISP functions like CCM, Super Palette, and Super Bayer to provide high-quality images.
- Compact design with mounting holes on panels for flexible mounting from 4 sides.
- Adopts GigE interface and max. transmission distance of 100 meters without relay.
- Compatible with GigE Vision V2.0 Protocol, GenlCam Standard, and third-party software basedon the protocol and standard.

Dimension

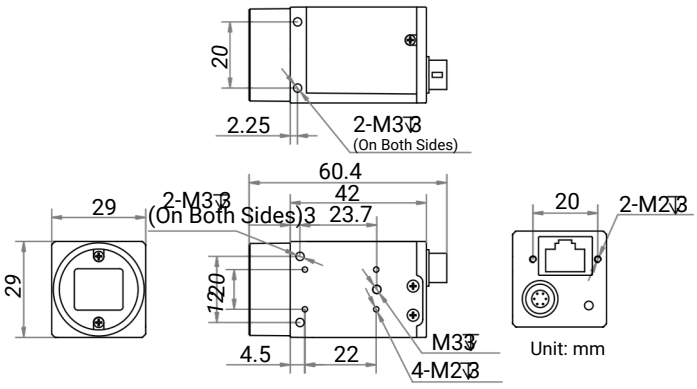

Sensor Quantum Efficiency

MV-CS032-60GM

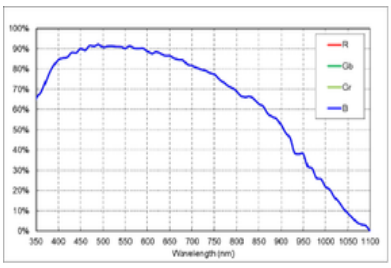

MV-CS032-60GC

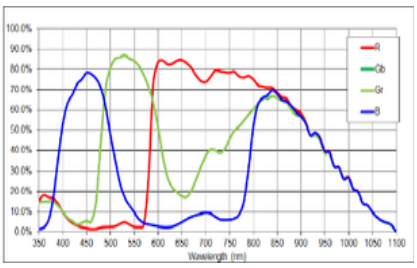

Specification

Model	MV-CS032-60GM	MV-CS032-60GC
Performance		
Sensor type	CMOS, global shutter Stacked BSI 3.45 μm × 3.45 μm 1/1.8" 2048 × 1536	
Sensor model	38.6 fps @ 2048 × 1536 Mono 8 73.9 dB 42.4 dB 0 dB to 24 dB 5 μs to 10	
Pixel size	sec Off/Once/Continuous exposure mode, and supports trigger-width	
Sensor size	exposure	
Resolution		
Max. frame rate		38.6 fps @ 2048 × 1536 Bayer GR 8
Dynamic range		
SNR		
Gain		
Exposure time		
Exposure mode		
Mono/color	Mono	Color
Pixel format	Mono 8/10/10Packed/12/12Packed	Mono 8/10/12, Bayer GR 8/10/10Packed/12/12Packed, YUV422Packed, YUV422_YUYV_Packed, RGB 8, BGR 8
Binning	Supports 1 × 1, 2 × 2, 4 × 4	
Decimation	Supports 1 × 1, 2 × 2, 4 × 4	
Reverse image	Supports horizontal and vertical reverse image output	
Electrical features		
Data interface	Gigabit Ethernet (1000 Mbit/s), compatible with Fast Ethernet (100 Mbit/s)	
Digital I/O	6-pin P7 connector provides power and I/O, including opto-isolated input × 1 (Line 0), opto-isolated output × 1 (Line 1), bi-directional non-isolated I/O × 1 (Line 2).	
Power supply	9 VDC to 24 VDC, supports PoE	
Power consumption	Typ. 2.1 W @ 12 VDC	Typ. 2.3 W @ 12 VDC
Mechanical		
Lens mount	C-mount	
Dimension	29 mm × 29 mm × 42 mm (1.1" × 1.1" × 1.7")	
Weight	Approx. 100 g (0.2 lb.)	
Ingress protection	IP40 (under proper lens installation and wiring)	
Temperature	Working temperature: −30 °C to 60 °C (−22 °F to 140 °F) Storage temperature: −30 °C to 80 °C (−22 °F to 176 °F)	
Humidity	20% RH to 95% RH (no condensation)	
General		
Client software	MVS or third-party software meeting with GigE Vision Protocol	
Operating system	32/64-bit Windows 7/10, 64-bit Windows 11, and 32/64-bit Linux	
Compatibility	GigE Vision V2.0, GenICam	
Certification	CE, RoHS, KC	

VISCON
VISCON TECHNOLOGY CO., LTD.
54/88 KHLONGSEE, KHLONG LUANG DISTRICT, PATHUM THANI 12120 THAILAND
TEL : 02-0009297
MB : 0809293068
E-MAIL : SALE@VISCONTECHNOLOGY.COM

© Hangzhou Hikrobot Co., Ltd. All Rights Reserved.
Hangzhou Hikrobot does not tolerate any infringement. Any organization or individual may not imitate or reproduce in whole or in part of the content. The data herein is based on Hikrobot's internal evaluation. Actual data may vary depending on specific configuration and operating condition. The information herein is subject to change without notice All the content has been checked conscientiously. Nevertheless, Hikrobot shall not be liable to damages resulting from errors, inconsistencies or omissions.