MV-GS1000

10 GigE Frame Grabber

Introduction

MV-GS1000 series 10 GigE frame grabber supports GigE Vision V2.0 protocol, and its SFP interfaces can be connected to 4 cameras at most via its pluggable SFP modules. According to different SFP modules, the frame grabber is applicable to 10 GigE industrial camera with RJ45 port or fiber optic interface.

Available Model

MV-GS1004

Key Features

- Supports GigE Vision V2.0 protocol with each channel accessing up to 10 Gbps data transfer speed.
- Various indicators indicate frame grabber status in real time.
- Adopts multiple I/O connectors for input and output.
- Provides SDK for secondary development.
- Complies with Genlcam standard.

Dimension

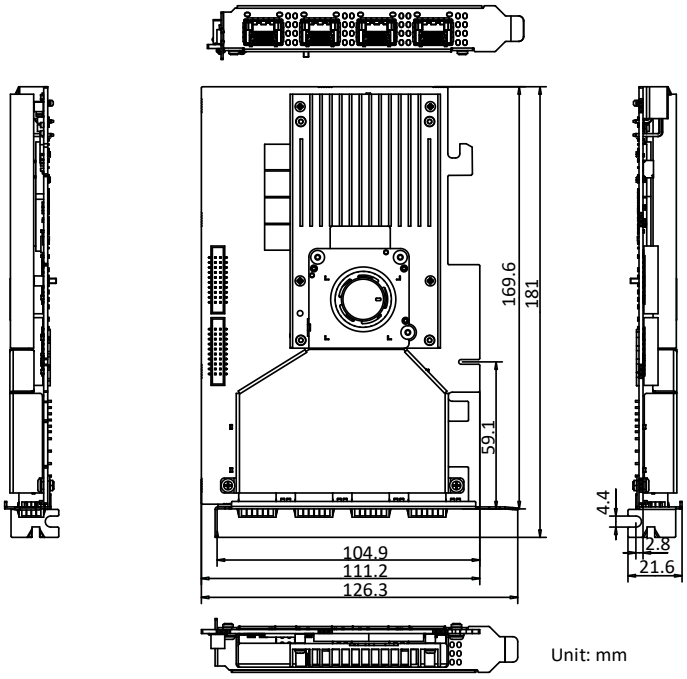

Specification

Model	MV-GS1004
Memory	
On-board memory	2 GB DDR3-RAM
Host interface	
Interconnect	PCI-E gen2 × 8
Delivery bandwidth	3900 MB/s (max. transmission bandwidth) 3350 MB/s (sustained transmission bandwidth)
Indicator	1
Camera interface	
Standard	GigE Vision V2.0
Interface	SFP × 4
Camera type supported	10 GigE industrial camera
Camera quantity supported	4 at most (total bandwidth up to 27 Gbps)
Camera connection speed	10 Gbps
Stream	4
Stream indicator	4 pairs
Processing feature	
Pixel format	Mono 8/10/10p/12/12p Bayer 8/10/10p/12/12p YUV422Packed, YUV422_YUYV_Packed
Jumbo frame	9 KB
GPIO	
I/O Type	Provides 24 I/O connectors, including opto-isolated input × 4 (4.5 VDC to 28 VDC), opto-isolated output × 4 (4.5 VDC to 28 VDC), RX422 input × 4, TX422 output × 4, TTL input × 4, and TTL output × 4
Connector	Female header
Electrical feature	
Power consumption	Typ. 20 W
Mechanical	
Dimension	181 mm × 126.3 mm × 21.6 mm (7.1" × 5.0" × 0.9")
Temperature	Working temperature: 0 °C to 60 °C (32 °F to 140 °F) Storage temperature: −20 °C to 70 °C (−4 °F to 158 °F)
Humidity	10% RH to 95% RH (no condensation)
General	
Client software	MVS
Operating system	Windows 7/10/11, Ubuntu 18.04 to 24.04 on 64-bit Linux
Certification	CE, KC

VISCON TECHNOLOGY CO., LTD.
54/88 KHLONGSEE, KHLONG LUANG DISTRICT, PATHUM THANI 12120 THAILAN
TEL : 02-0009297
MB : 0809293068
E-MAIL : SALE@VISCONTECHNOLOGY.COM

© Hangzhou Hikrobot Co., Ltd. All Rights Reserved.
Hangzhou Hikrobot does not tolerate any infringement. Any organization or individual may not imitate or reproduce in whole or in part of the content. The data herein is based on Hikrobot's internal evaluation. Actual data may vary depending on specific configuration and operating condition. The information herein is subject to change without notice All the content has been checked conscientiously. Nevertheless, Hikrobot shall not be liable to damages resulting from errors, inconsistencies or omissions.